SET-UP SHEET

Driver	Alexandre Kunkler
Race	ETS practice
Trackname	Aigen
Date	2023-06-25

Track conditions

Surface	✓ Asphalt Outdoor	☐ Asphalt Indoor	☐ Carpet
Layout	☐ Tech	✓ Med	✓ Fast
traction	☐ Low	☐ Med	✓ High

Transmission

Gear diff oil/cst:	3000cst
Gear diff oil/grams:	1.0g
Spurgear	110
Pinion	32
Final drive ratio (1.9)	6.5

Belt width

Front	3
Middle	3
Rear	3

Front	Shocks	Rear
12.9	**Spring**	33.1
600cst	**Oil**	2000cst
1 hole	**Piston**	1 hole
std	**Housing**	std

HEAVE SHOCK

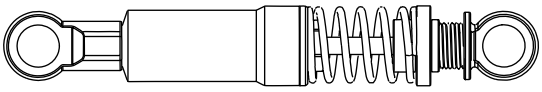

Spring		**Preload**	
Oil		**Piston**	

Front		Rear
1.1	**Stabilizer Thickness**	1.2
49	**Weight balance %**	51

Front		Rear
ETS Matrix	**Tires**	ETS Matrix
ETS	**Additive**	ETS
10 min	**Additive time**	10 min
	Treated area	

Motor	Ruddog Racing RP542 5.0T	**Timing**	20°
ESC	Ruddog Racing RXS	**Batteries**	Ruddog Racing 6600
Body	Bitttydesign Eptron	**Wing**	Bittydesign Modspec

Titanium ballstuds
3mm rear topdeck
3.5mm rear wheelhex

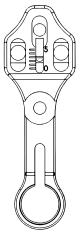

Ackermann setting
3 mm

Steering lock inside tire
24 degree

Servo arm length
17 mm

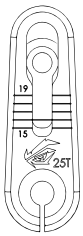

FRONT

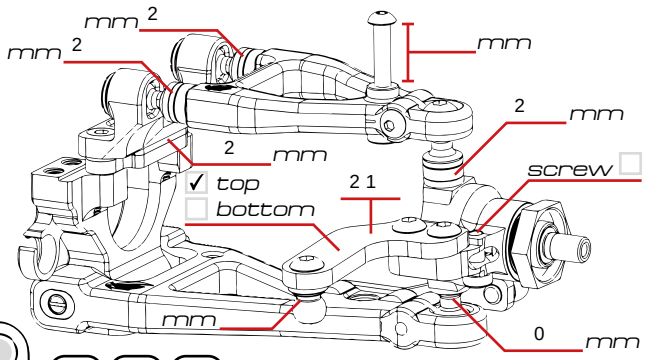

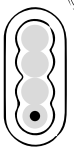

wide/middle/narrow

Ride height	5.2	**Toe out**	0.5
Droop	4,8	**Camber**	1.5

REAR

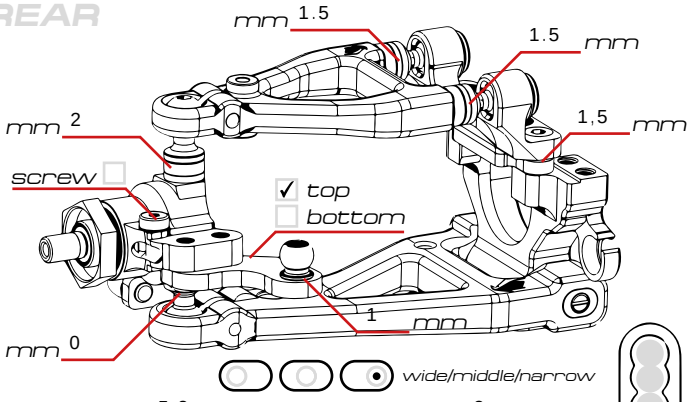

wide/middle/narrow

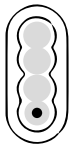

Ride height	5.8	**Toe in**	3
Droop	4,0	**Camber**	1.5

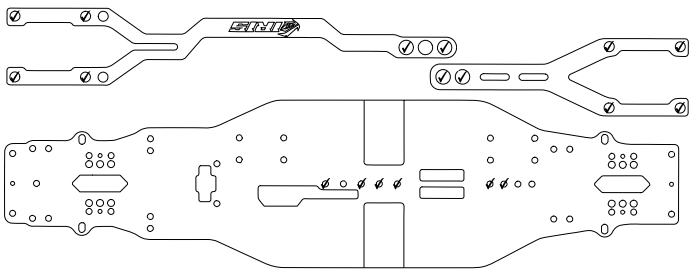

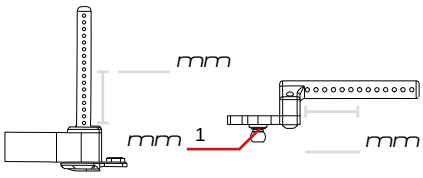

Chassis

- ● Carbon
- ○ Alu Liniar Flex
- ○ Alu Solid