DESTINY SET-UP SHEET RX-10SR 3.0

DATE	24th August	CONDITION	☐ FLAT ☐ BUMPY ☑ TIGHT ☐ OPEN
DRIVER	Zen-Racing		☐ CARPET ☑ ASPHALT (☐ INDOOR) (☑ OUTDOOR)
TRACTION	HIGH ☐ ☐ ☑ ☐ ☐ LOW	TEMP °C	AIR 22 / TRACK

EVENT	Club	TRACK	Eastbourne	QUALIFYING	1	FINAL	1

FRONT

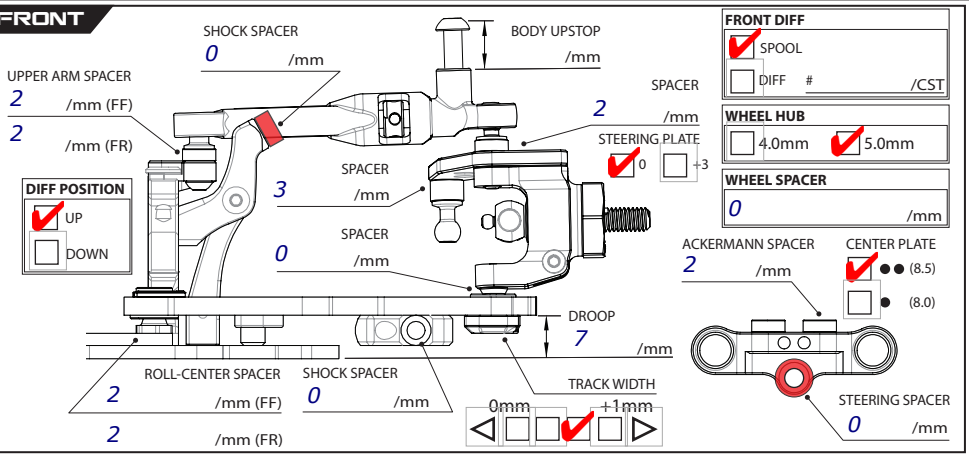

FRONT DIFF	☑ SPOOL ☐ DIFF # /CST
WHEEL HUB	☐ 4.0mm ☑ 5.0mm
WHEEL SPACER	0 /mm
RIDE HEIGHT	5.2 /mm
CAMBER	2 °
CASTER	☐ 4° ☑ 5° °
SWAY BAR	☐ 1.3 ☐ 1.4 ☐ kit
DOUBLE JOINT DRIVE SHAFT	☑ KIT (44.5) ☐ LONG (47)
TOE ANGLE	0 °

SHOCK ABSORBER

OIL	30wt Losi /CST
LENGTH	10 /mm
REBOUND	100 %
SPRING	☐ 2.5 ☑ 2.6 ☐ 2.7 ☐
ABSORBER MEMBRANCE	kit
PISTON	kit

REAR

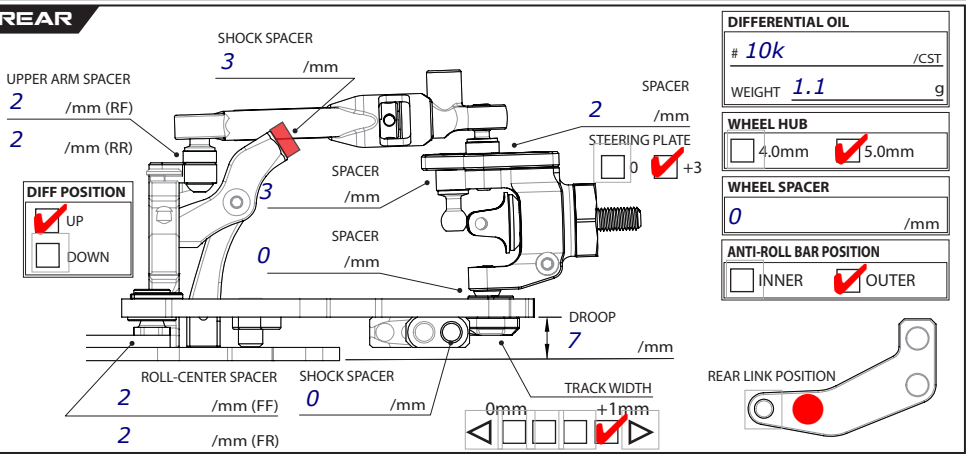

DIFFERENTIAL OIL	# 10k /CST WEIGHT 1.1 g
WHEEL HUB	☐ 4.0mm ☑ 5.0mm
WHEEL SPACER	0 /mm
ANTI-ROLL BAR POSITION	☐ INNER ☑ OUTER
RIDE HEIGHT	5.4 /mm
CAMBER	2 °
CASTER	☑ 0° ☐ 1° °
SWAY BAR	☐ 1.2 ☐ 1.3 ☐ kit
DRIVE SHAFT	☐ ALUMINIUM ☐ STEEL
TOE ANGLE	2

SHOCK ABSORBER

OIL	30wt losi /CST
LENGTH	10 /mm
REBOUND	100 %
SPRING	☐ 2.5 ☐ 2.6 ☑ 2.7 ☐
ABSORBER MEMBRANCE	kit
PISTON	kit

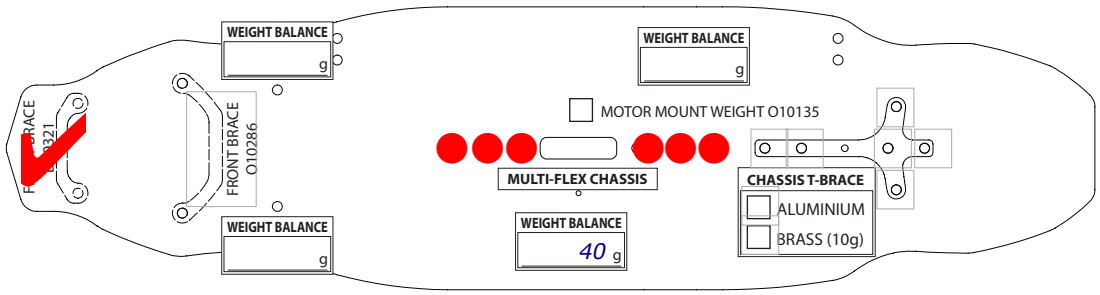

TRACK WIDTH	FRONT /mm REAR /mm
BATTERY PLACEMENT	☑ FORWARD ☐ BACKWARD
MAIN CHASSIS	☑ GRAPHITE ☐ ALUM (FLEX) ☐ ALUM (SOLID)
UPPER DECK	☐ 1.6mm ☐ 2.0mm
SERVO HORN	SPACER /mm ☑ KIT ☐ ALUM

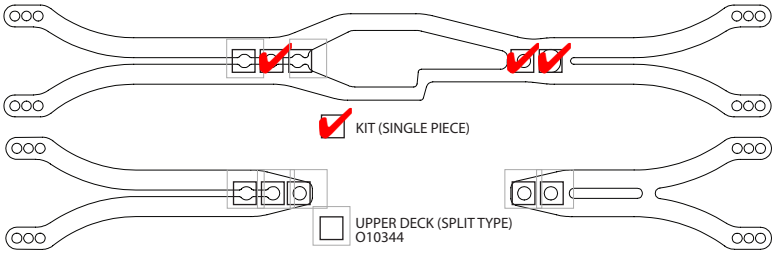

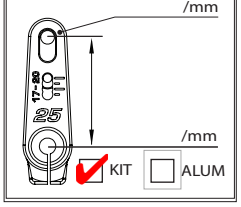

TIRE SETTING

FRONT AND REAR

TIRE	sweep 34 BRCA Build
INSERT	
WHEEL	
ADDITIVE	spider green
ADDITIVE TIME	Fr 20mins /MINS - Rr 20mins /MINS

MOTOR	17.5 TURNS	ROTOR	/mm	MOTOR TIMING	46 °
PINON GEAR	47T	SPUR GEAR	88T	FINAL RATIO	3.55
ESC	hw	SETUP	blinky		
BATTERY	ip5900 ☐ SHORT	BODY	blitz tcn	TOTAL WEIGHT	/g

NOTES

Car is super safe and easy to drive.