DESTINY RACING TEAM — SET-UP SHEET — RX-10F 3.0

DATE	28.5.23
DRIVER	Will Everett

CONDITION: ☐ FLAT ☑ BUMPY ☐ TIGHT ☐ OPEN ☐ CARPET ☑ ASPHALT (☐ INDOOR) (☑ OUTDOOR)

TRACTION: HIGH ☐ ☐ ☑ ☑ ☐ LOW

TEMP °C: AIR | TRACK

EVENT	BRCA Nat - West London	BEST LAP TIME		QUALIFYING POSITION		FINAL POSITION	

FRONT

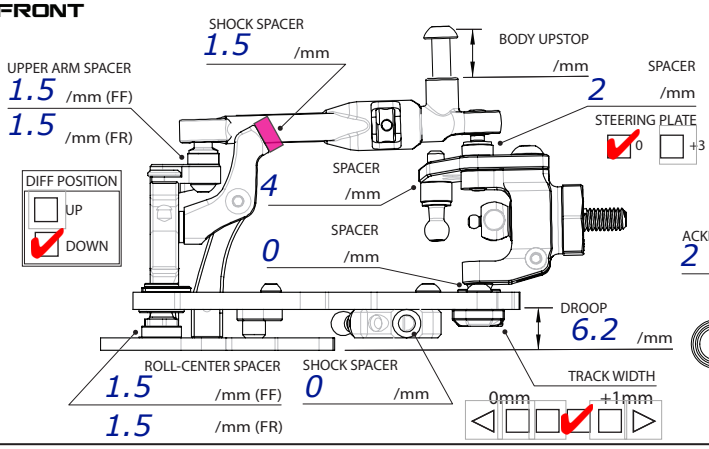

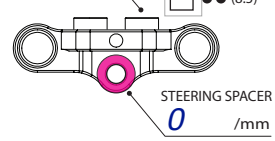

FRONT DIFF	☑ DIFF # 2 Mill /CST
WHEEL HUB	☐ 4.0mm ☑ 5.0mm
WHEEL SPACER	0 /mm
RIDE HEIGHT	5.4 /mm
CAMBER	-2 °
CASTER	☑ 4° ☐ 5° °
SWAY BAR	☑ 1.3 ☐ 1.4 ☐ OTHERS
TOE ANGLE	+1 °

Yokomo Springs

SHOCK ABSORBER

OIL	350 Hudy /CST
LENGTH	52.5 /mm
REBOUND	0 %
SPRING	☐ 2.5 ☐ 2.6 ☐ 2.7 ☐ OTHERS 2.5-2.8
ABSORBER MEMBRANCE	
PISTON	☐ 3 HOLES ☑ 4 HOLES

REAR

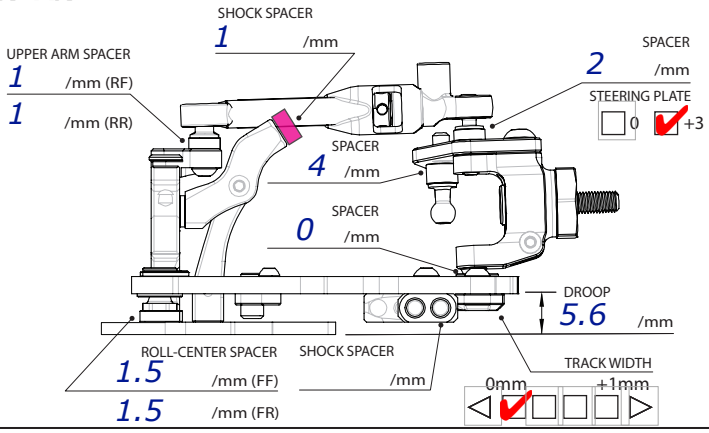

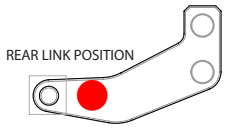

WHEEL HUB	☐ 4.0mm ☑ 5.0mm
WHEEL SPACER	.5 /mm
ANTI-ROLL BAR POSITION	☐ INNER ☑ OUTER
RIDE HEIGHT	5.6 /mm
CAMBER	-2 °
CASTER	☐ 5° ☑ 4° °
SWAY BAR	☑ 1.2 ☐ 1.3 ☐ OTHERS
TOE ANGLE	-2.5

Yokomo Springs

SHOCK ABSORBER

OIL	350 /CST
LENGTH	52.5 /mm
REBOUND	0 %
SPRING スプリング	☐ 2.5 ☐ 2.6 ☐ 2.7 ☐ OTHERS 2.0-2.3
ABSORBER MEMBRANCE	
PISTON	☐ 3 HOLES ☑ 4 HOLES

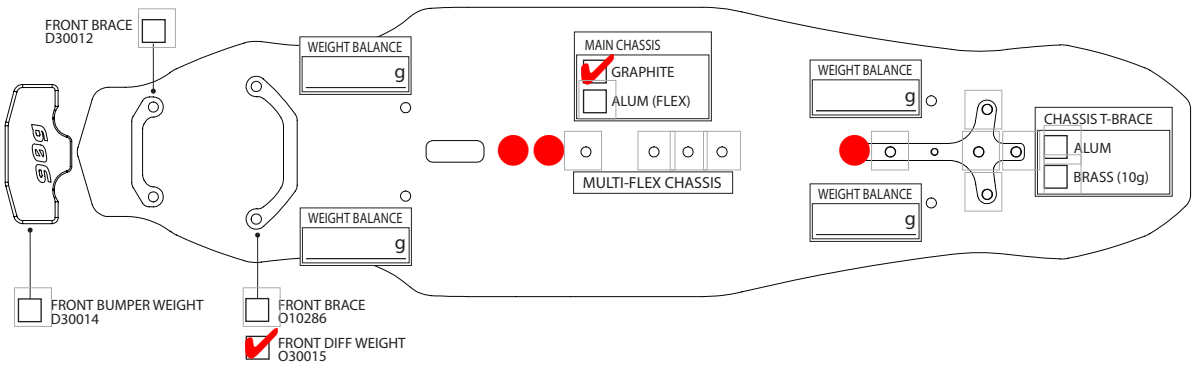

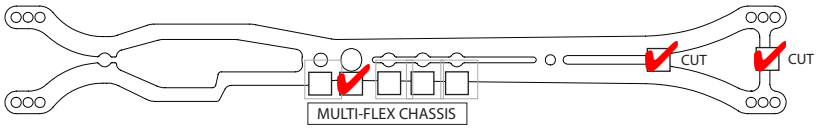

TRACK WIDTH FRONT	/mm
TRACK WIDTH REAR	/mm
SERVO HORN SPACER	/mm
SERVO HORN	/mm ☐ KIT ☐ ALUM
UPPER DECK	☑ KIT (SINGLE PIECE) ☐ 1.6mm ☐ 2.0mm

TIRE SETTING

FRONT & REAR

TIRE	
INSERT	
WHEEL	
ADDITIVE	
ADDITIVE TIME	Fr - 20 /MINS Rr - 20 /MINS

MOTOR	TURNS	ROTOR	/mm	MOTOR TIMING	°
PINON GEAR	52T	SPUR GEAR	76T	FINAL RATIO	
ESC		SETUP			
BATTERY	☐ SHORTY	BODY		TOTAL WEIGHT	/g

Diff weights plus additional (30g = 60G in bumper)
Centre post at the front hole for T Brace fixed to topdeck.