AWESOMATIX A800FXR — SETUP SHEET

NAME	Monti	DATE	6/8/25
COUNTRY	USA	TEMP. °C AIR / TRACK	92f /
RACE		TRACK SURFACE	ASPHALT ☑ CARPET ☐
TRACK	Heroes Paradise, FL	TRACK LAYOUT	TECHNICAL ☐ MIXED ☑ FAST ☐
		TRACTION	LOW ☐ MEDIUM ☑ HIGH ☐

FRONT

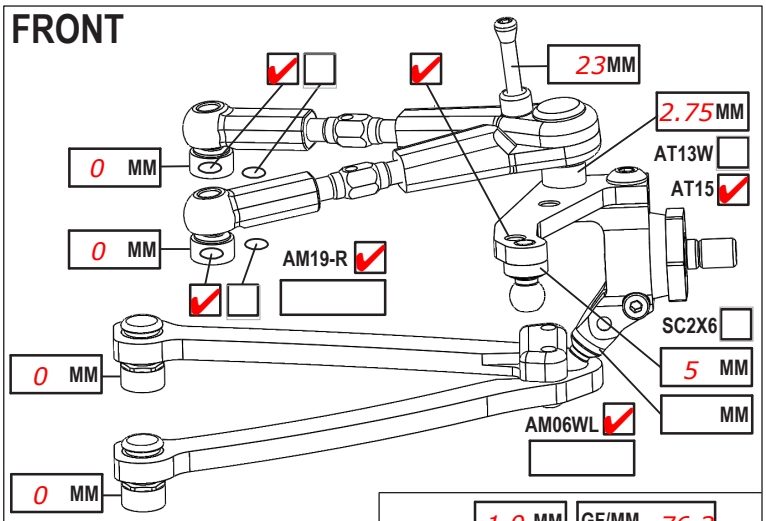

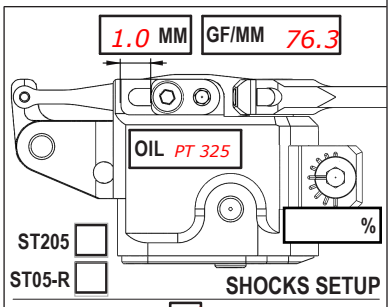

CAMBER ANGLE / °	2
CASTER ANGLE / °	6
TOE ANGLE / °	1 out
RIDE HEIGHT / MM	5
DOWNSTOP / MM	61
ANTI-ROLL BAR Ø / MM	1
ARB STIFFENER 1/4 ☐ 1/2 ☐ 3/4 ☐ 1 ☐	
LOWER ARM EXTENSION	0 MM
STEER. ARM AM14FX	☑
WHEEL SPACER / MM	
DRIVE SPOOL	☑ DIFF ☐
DRIVE POSITION UP	☑ DOWN ☐
DIFF OIL 100k	DIFF SHIMS kit

DAMPER D4	☑
ROTOR 2 HOLES	☑
SPRING STD	☑ S ☐
SRS/RHS ARR. I	☑ II ☐
PSS SETUP 30%	☐ 25% ☐ 15% ☐
DAMPING LINEAR	☐ P1 ☐ P2 ☑
DAMPER SPACER / MM	0

REAR

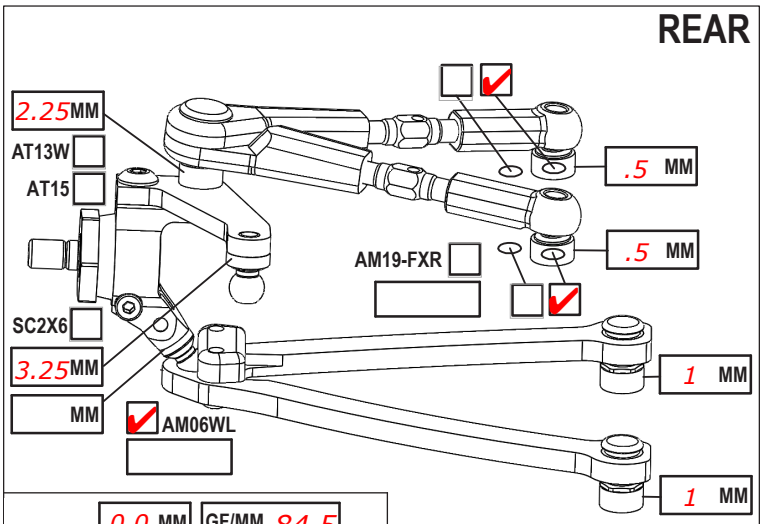

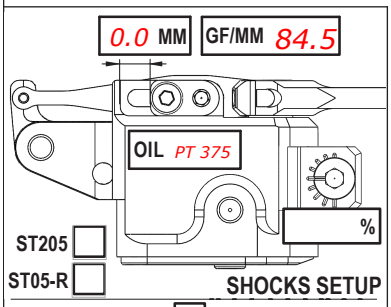

CAMBER ANGLE / °	1.5
CASTER ANGLE / °	-4
TOE ANGLE / °	2
RIDE HEIGHT / MM	5
DOWNSTOP / MM	4.3
ANTI-ROLL BAR Ø / MM	1.3
ARB STIFFENER 1/4 ☐ 1/2 ☐ 3/4 ☐ 1 ☐	
LOWER ARM EXTENSION	0 MM
STEER. ARM AM23-1	☑
WHEEL SPACER / MM	
WHEEL BASE #1 ☐ #2	☑ #3 ☐ #4 ☐

DAMPER D4	☑
ROTOR 2 HOLES	☑
SPRING STD	☑ S ☐
SRS/RHS ARR. I	☑ II ☐
PSS SETUP 30%	☐ 25% ☐ 15% ☐
DAMPING LINEAR	☑ P1 ☐ P2 ☐
DAMPER SPACER / MM	1mm
C45FXR YES	☑ NO ☐

CHASSIS FLEX AND WEIGHT SETTINGS

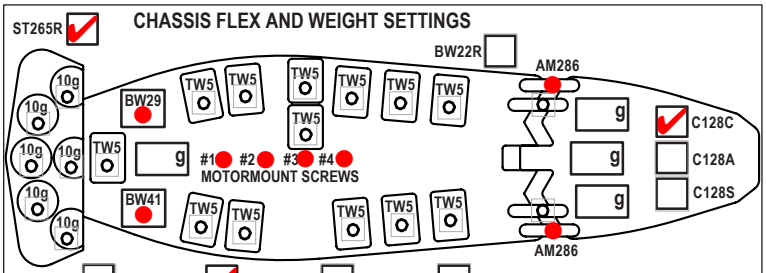

AM220FXR ☐ C01FXR-A ☑ C01FXR-C ☐ C01FXR-S ☐

☐ BUMPER TOP PLATE CUT BUMPER TOP PLATE P14-5-R ☑ C07R ☐ C07RF ☐

☐ AM288 FRONT BUMPER P15FX ☐ P15L ☐ MXLR

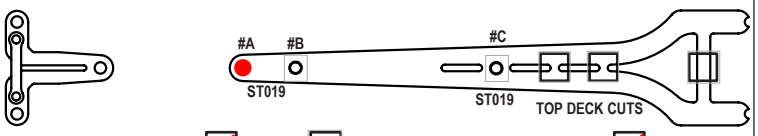

FRONT TOP DECK C107FXG ☑ C107FXC ☐ REAR TOP DECK 27FXR ☑

SINGLE TOP DECK C27FXR-L ☐

TIRES	USGT Gravity non belted
INSERTS	
SIDE WALLS GLUE Ø / MM	F 0 R 0
ADDITIVE	TIME MIN. F 10 R 10
TOTAL WEIGHT 1199	WEIGHT DISTRIBUTION % F 66 R 34
NOTES:	

MOTOR LATERAL SHIFT / MM	SERVO MKS
MOTOR HW 17.5 just stock	SERVOHORN / HEIGHT 16mm
SPUR 90 PINION 46 RATIO 3.72	STEER TRAVEL IN OUT
BODY Gorilla Max	BATTERY EAM 4200
WING kit, Red Mosquito side dams	RECEIVER
ESC HW Just stock	RADIO
ESC SETTING 15000 RPM limit used	
BEST LAPTIME 15.7	QUALIF./FINAL POSITION 1 / 1

BODY POSITIONS

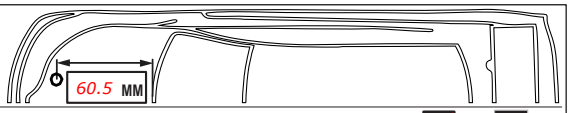

MIDDLE HOLE <--> BOTTOM WINDOW LINE

FRONT BODY POST

ORING YES ☐ NO ☑

HOLE # 7

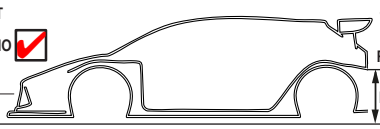

WINGLET YES ☑ NO ☐

REAR HRB SETTING / MM 1.75

REAR BODYHEIGHT / MM

COMMENTS:

Option Parts, AT15, OR14V, AT144

Tires feel off hard after two runs, car was loosing steering runs 3 & 4. Did not have time to blance the car left and right. No weight limit at this track for FWD. For my first time running FWD, car drove great