AWESOMATIX A800FX — SETUP SHEET

NAME	Robin van Gog	DATE	21/24 July 2022
COUNTRY	Austria	TEMP. °C AIR / TRACK	33 /
RACE	ETS R2 2022/2023	COMPOSITION	ASPHALT ☑ (OUTDOOR ☑ INDOOR ☐) CARPET ☐
TRACK	M.A.V. Aigen	LAYOUT	TECHNICAL ☐ MIXED ☐ FAST ☑
		TRACTION	LOW ☐ MEDIUM ☑ HIGH ☐

FRONT

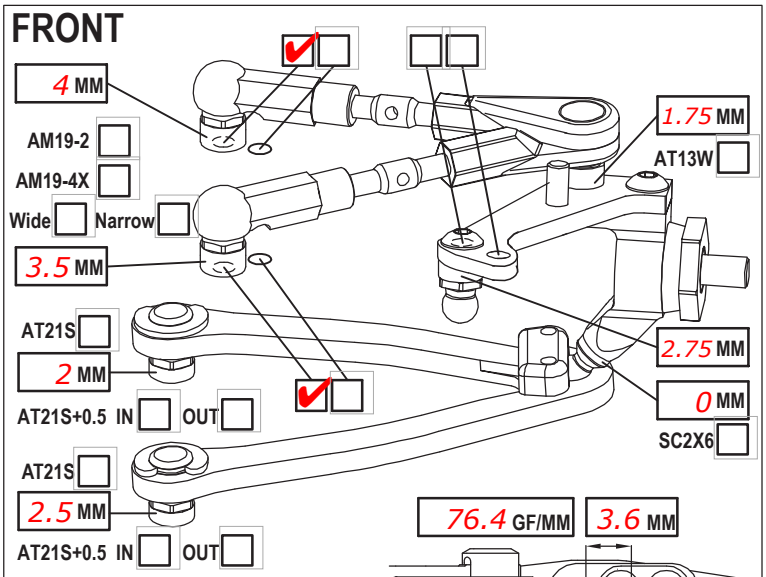

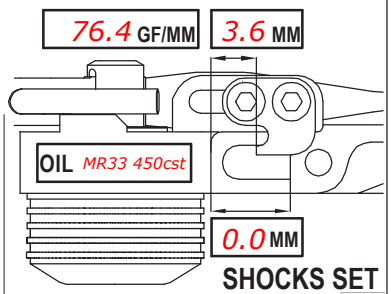

CAMBER ANGLE / °	1
CASTER ANGLE / °	5
TOE ANGLE / °	0.5
RIDE HEIGHT / MM	5.2
DOWNSTOP / MM	5.8
UPWNSTOP / MM	
STABILIZER Ø / MM	1.0
LOW ARM C04M1+0.5	☐ ☐
STEER. ARM AM14LS	☐ ☐
WHEEL SPACER / MM	
FRONT DRIVE SPOOL	☐ GB2B ☑
DIFF. OIL	100K
DIFF WASHERS	
DOGBONE DRIVE ST02	☐
WHEELHUB AM06WL	☑ ☐

SHOCKS SET

ROTOR	STD ☑		☐
SPRING	STD ☑	S	☐
DAMPER	D2.2 ☑		☐
SRS/RHS ARR.	I ☑	II	☐
PSS SETUP	MM 25% ☑	15%	☐
	LOW ☑	HIGH	☐

REAR

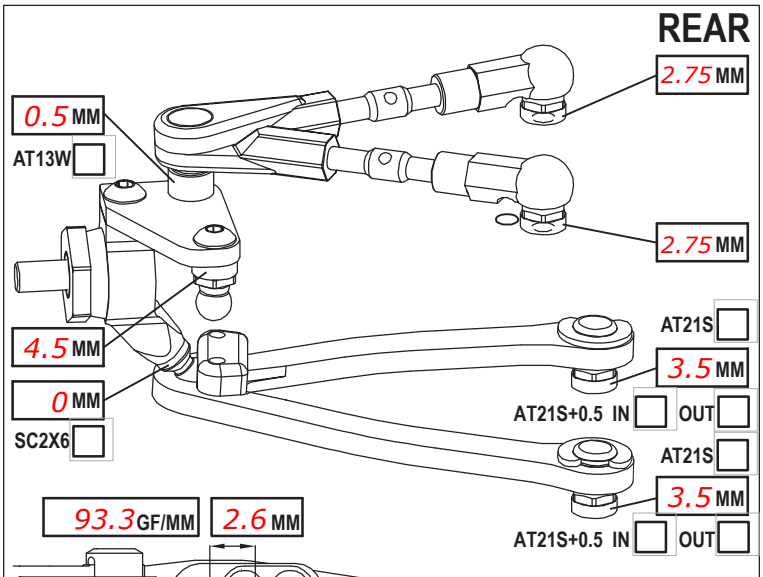

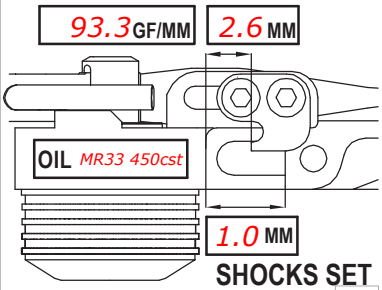

CAMBER ANGLE / °	1.5
CASTER ANGLE / °	-1
TOE ANGLE / °	-2
RIDE HEIGHT / MM	6.0
DOWNSTOP / MM	4.8
UPWNSTOP / MM	
STABILIZER Ø / MM	1.2
LOW ARM C04M1+0.5	☐ ☐
STEER. ARM AM23	☐ ☐
WHEEL SPACER / MM	0.5
WHEELHUB AM06WL	☑ ☐

SHOCKS SET

ROTOR	STD ☑		☐
SPRING	STD ☑	S	☐
DAMPER	D2.2 ☑		☐
SRS/RHS ARR.	I ☑	II	☐
PSS SETUP	MM 25% ☐	15%	☐

CHASSIS FLEX AND WEIGHT SETTINGS

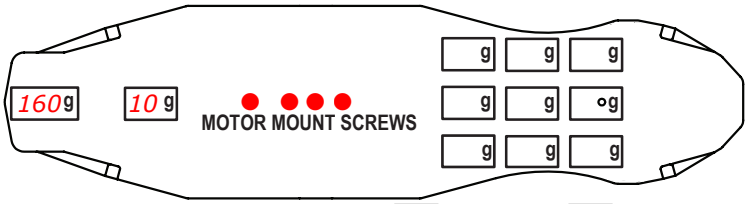

LOWER DECK C01B-FXC ☐ C01B-FXA ☐

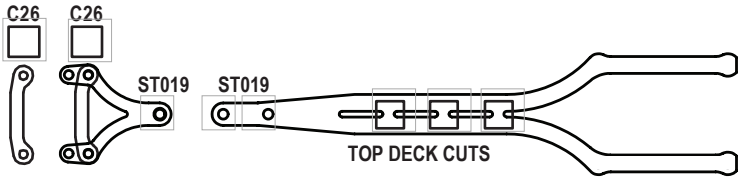

TOP DESK C27FX ☐

TIRES	Ride		
INSERTS	-		
WHEELS	-		
ADDITIVE	MR33 v3	TIME - FR	RR
TOTAL WEIGHT	1256	WEIGHT DISTRIBUTION FR	68 % - RR 32 %

MOTOR LATERAL SHIFT / MM 0	ACKERMANN SHIMS / MM 0
MOTOR Hobbywing 17.5t	SERVO PowerHD S15
SPUR PINION 1 RATIO 0.00	STEER TRAVEL IN OUT 23
BODY Zooracing Gorilla +2mm forward	BATTERY Gens Ace 4000
WING kit	RECEIVER Sanwa RX-482
ESC Hobbywing	RADIO Sanwa MT-44
ESC SETTING	
BEST LAPTIME 20.209	QUALIF./FINAL POSITION 2 / 2

used AM30FX chassis stiffener, C27FX-L full length upper deck and BW95 floating front weight
Used normal titanium screws in topdeck not recessed.
Used brass and titanium screws on chassis