AWESOMATIX A800FX EVO

SETUP SHEET
VERSION 1.0

NAME	Mischa Kroos	DATE	06/07.11.20
COUNTRY	France	TEMP. °C AIR / TRACK	/
RACE	Longwy Winter Series Rnd. 1	ASPHALT ☐ OUTDOOR ☐ INDOOR ☑	CARPET ☑
TRACK	MRC Longwy	TRACK CONDITION TECHNICAL ☑ MIXED ☐	FAST ☐
		TRACTION LOW ☐ MEDIUM ☑	HIGH ☑

FRONT

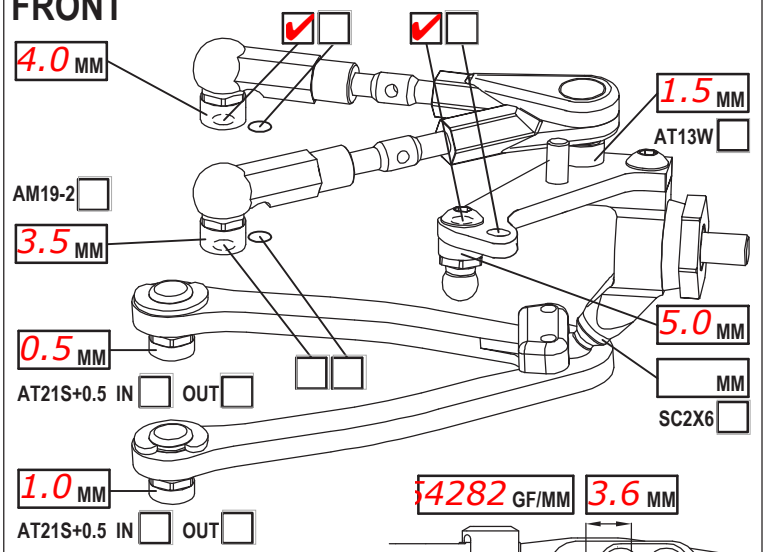

54282 GF/MM | 3.6 MM

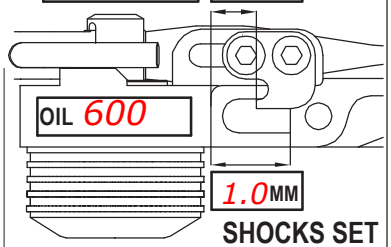

SHOCKS SET

CAMBER ANGLE / °	1.5
CASTER ANGLE / °	5.0
TOE ANGLE / °	0
RIDE HEIGHT / MM	5.2
DOWNSTOP / MM	5.8
UPWNSTOP / MM	
STABILIZER Ø / MM	1.0
LOW ARM C04M1+9.0 ☐	+8 ☑
STEER. ARM AM14FX ☑	☐
WHEELHUB AM06WL ☑	☐
DRIVE SPOOL ☐	DIFF ☑
DIFF. OIL	500'000
WHEEL SPACER / MM	

ROTOR	STD ☑	☐
SPRING	STD ☑	S ☐
DAMPER	D2.2 ☐	☐
SRS/ST69 ARR.	I ☑	II ☐
PSS SETUP	15% ☐	25% ☐
	LOW ☐	HIGH ☑
DIFF WASHERS		
STEERING	SBFX ☑	LS ☐

REAR

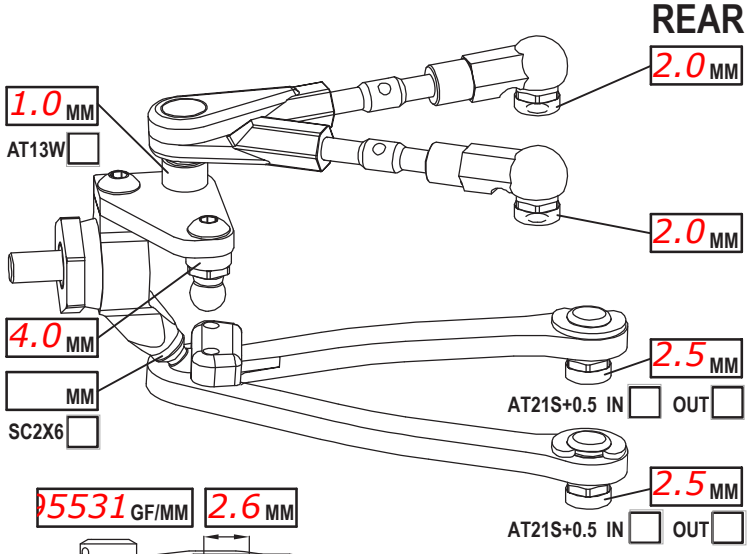

95531 GF/MM | 2.6 MM

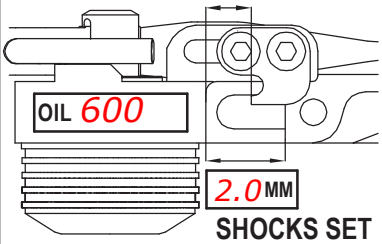

SHOCKS SET

CAMBER ANGLE / °	0.5
CASTER ANGLE / °	-5
TOE ANGLE / °	2.0
RIDE HEIGHT / MM	5.4
DOWNSTOP / MM	4.6
UPWNSTOP / MM	
STABILIZER Ø / MM	1.2
LOW ARM C04M1+8.0 ☑	☐
STEER. ARM AM23-1 ☑	☐
WHEELHUB AM06WL ☑	☐
WHEEL SPACER / MM	

ROTOR	STD ☑	☐
SPRING	STD ☑	S ☐
DAMPER	D2.2 ☐	☐
SRS/ST69 ARR.	I ☑	II ☐
PSS SETUP	15% ☐	25% ☐

CHASSIS FLEX AND WEIGHT SETTINGS

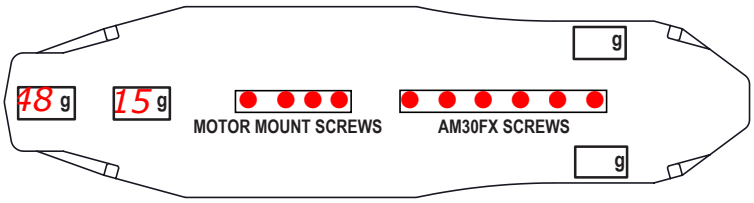

LOWER DECK C01FXCL ☑ C01FXAL ☐ ☐

C26 ☐ ST09 ☑

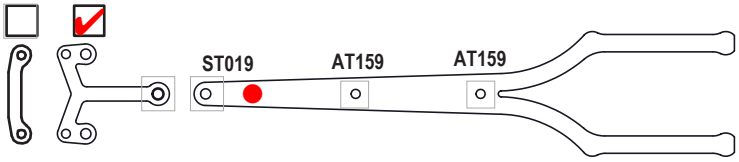

REAR TOP DESK C27FX-2 ☐ C27FX-L ☑

FRONT TOP DESK C107S ☐ ☐

TIRES	Ride 24025PG
INSERTS	
WHEELS	
ADDITIVE	Mighty White
TOTAL WEIGHT	1268
NOTES:	Additive applied 2 times (after 20 m

TIME - FR 40 RR 40

WEIGHT DISTRIBUTION - F 68 % R 32 %

MOTOR LATERAL SHIFT / MM	1.75	ACKERMANN SHIMS / MM	
MOTOR	HW G3R 17.5T	SERVO	MKS HBL575 SL
SPUR 102 PINION 43 RATIO 6046		STEER TRAVEL IN 25 OUT	
BODY	Zooracing Gorilla	BATTERY	Marka 6000 mah
WING	Std. no Winglets	RECEIVER	Rx482
ESC	HW XR10 Pro G2	RADIO	Sanwa M17
ESC SETTING	Blinky		
BEST LAPTIME	13.476	QUALIF./FINAL POSITION	1 / 1

MR33 Oil, ADC, AT15, Alu Screws on top