AWESOMATIX A800FX EVO

SETUP SHEET
VERSION 1.0

NAME	Max Mächler	DATE	24.04.2021
COUNTRY	Germany	TEMP. °C AIR / TRACK	/
RACE	First asphalt test 2021	ASPHALT ✔ OUTDOOR ✔ INDOOR ☐	CARPET ☐
TRACK	Andernach Arena33	TRACK CONDITION TECHNICAL ☐ MIXED ✔	FAST ☐
		TRACTION LOW ✔ MEDIUM ✔	HIGH ☐

FRONT

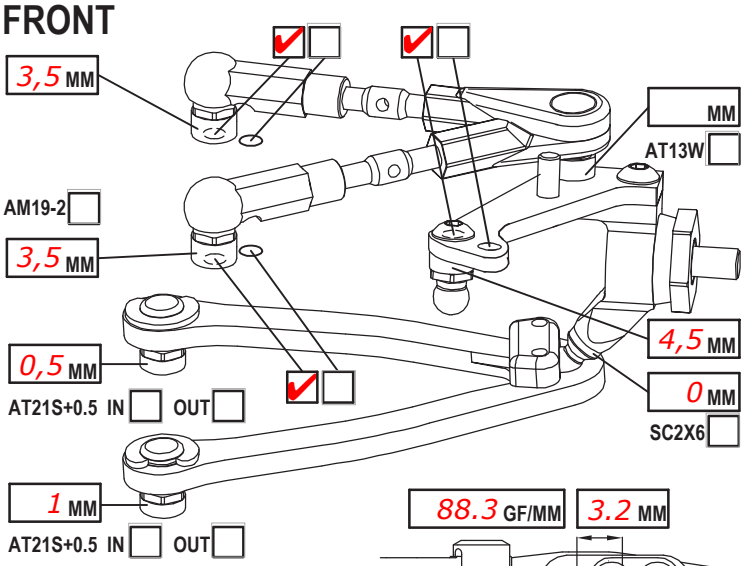

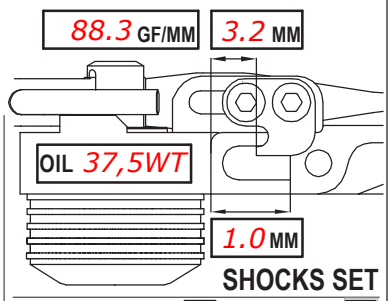

SHOCKS SET

CAMBER ANGLE / °	1,0
CASTER ANGLE / °	5
TOE ANGLE / °	1,0 per side
RIDE HEIGHT / MM	5,6
DOWNSTOP / MM	5,6
UPWNSTOP / MM	-
STABILIZER Ø / MM	1,0
LOW ARM C04M1+9.0	✔ ☐
STEER. ARM AM14FX	✔ ☐
WHEELHUB AM06WL	✔ ☐
DRIVE SPOOL ☐ DIFF	✔
DIFF. OIL	500.000
WHEEL SPACER / MM	0

ROTOR	STD ✔	☐
SPRING	STD ✔	S ☐
DAMPER	D2.2 ✔	☐
SRS/ST69 ARR.	I ✔	II ☐
PSS SETUP	15% ☐	25% ☐
	LOW ☐	HIGH ✔
DIFF WASHERS		std.
STEERING	SBFX ✔	LS ☐

REAR

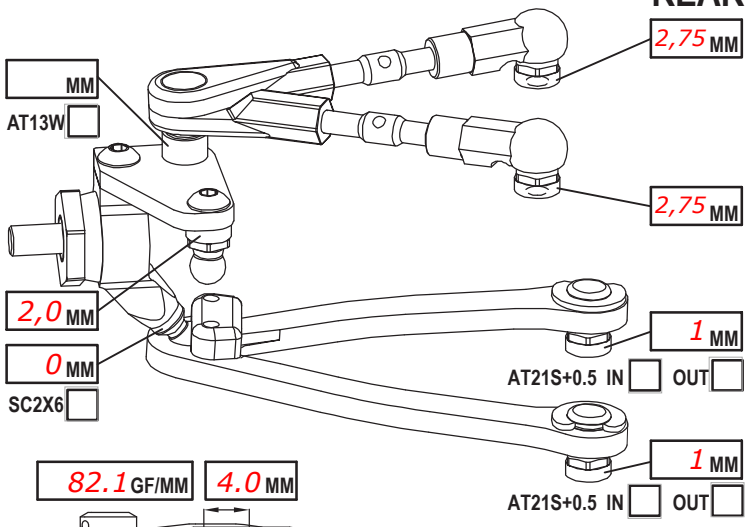

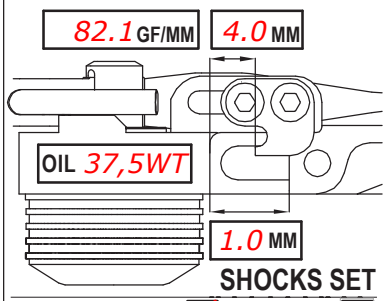

SHOCKS SET

CAMBER ANGLE / °	1,5
CASTER ANGLE / °	-2
TOE ANGLE / °	1,25
RIDE HEIGHT / MM	5,8
DOWNSTOP / MM	4,8
UPWNSTOP / MM	-
STABILIZER Ø / MM	1,0
LOW ARM C04M1+8.0	✔ ☐
STEER. ARM AM23-1	✔ ☐
WHEELHUB AM06WL	✔ ☐
WHEEL SPACER / MM	0

ROTOR	STD ✔	☐
SPRING	STD ✔	S ☐
DAMPER	D2.2 ✔	☐
SRS/ST69 ARR.	I ✔	II ☐
PSS SETUP	15% ☐	25% ☐

CHASSIS FLEX AND WEIGHT SETTINGS

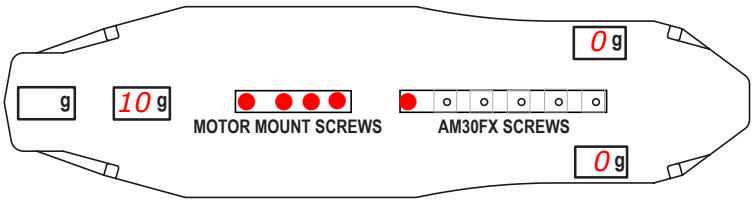

LOWER DECK C01FXCL ✔ C01FXAL ☐ ☐

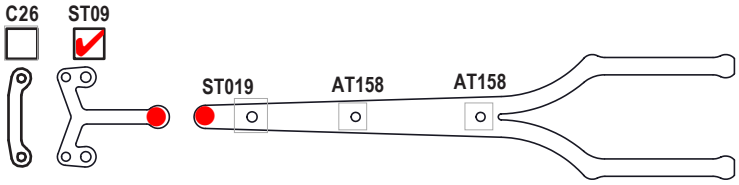

REAR TOP DESK C27FX-2 ✔ ☐
FRONT TOP DESK C107S ✔ ☐

TIRES	RIDE ETS BELTED
INSERTS	-
WHEELS	-
ADDITIVE	ETS
TOTAL WEIGHT	

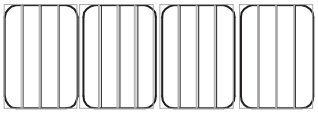

TIME - FR 10 RR 10

WEIGHT DISTRIBUTION - F 68 % R 32 %

NOTES:

MOTOR LATERAL SHIFT / MM 0	ACKERMANN SHIMS / MM -
MOTOR 17,5T	SERVO MKS HBL 575SL
SPUR 102 PINION 43 RATIO 4,51	STEER TRAVEL IN 28 OUT
BODY ZooRacing Gorilla	BATTERY Sunpadow 4500
WING Std.	RECEIVER Sanwa RX-482
ESC Hobbywing	RADIO Sanwa M17
ESC SETTING	
BEST LAPTIME 23,8	QUALIF./FINAL POSITION - / -