AWESOMATIX A800FX EVO

SETUP SHEET
VERSION 1.0

NAME	Mario Diedrich	DATE 01/2024	TEMP. °C AIR / TRACK /
COUNTRY		ASPHALT ☑ OUTDOOR ☐ INDOOR ☑	CARPET ☐
RACE	ETS	TRACK CONDITION TECHNICAL ☑	MIXED ☑ FAST ☐
TRACK	Daun	TRACTION LOW ☐	MEDIUM ☑ HIGH ☑

FRONT

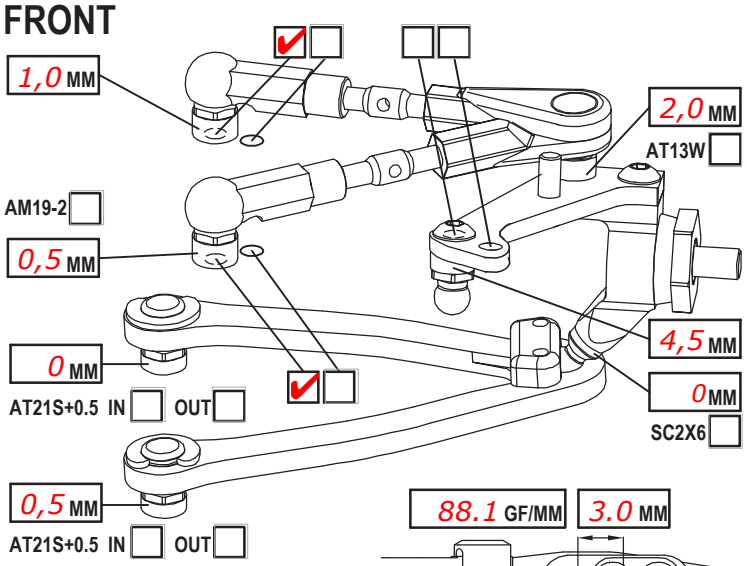

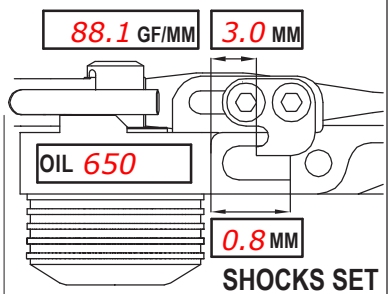

CAMBER ANGLE / °	0,5	SHOCKS SET	
CASTER ANGLE / °	5		
TOE ANGLE / °	1		
RIDE HEIGHT / MM	5.2		
DOWNSTOP / MM	5,4		
UPWNSTOP / MM		ROTOR STD ☑	☐
STABILIZER Ø / MM	-	SPRING STD ☑	S ☐
LOW ARM C04M1+9.0 ☑	☐	DAMPER D2.2 ☑	☐
STEER. ARM AM14FX ☑	☐	SRS/ST69 ARR. I ☑	II ☐
WHEELHUB AM06WL ☑	☐	PSS SETUP 15% ☐	25% ☑
DRIVE SPOOL ☐	DIFF ☐	LOW ☐	HIGH ☑
DIFF. OIL	200k	DIFF WASHERS	Std.
WHEEL SPACER / MM		STEERING SBFX ☐	LS ☐

REAR

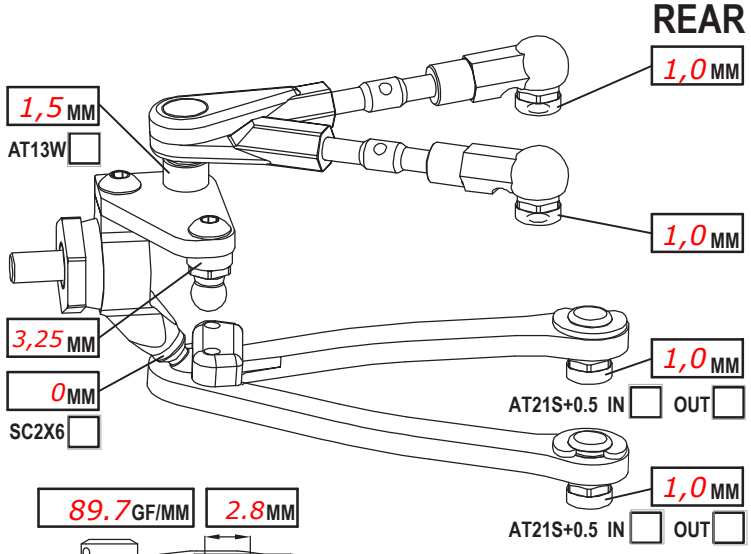

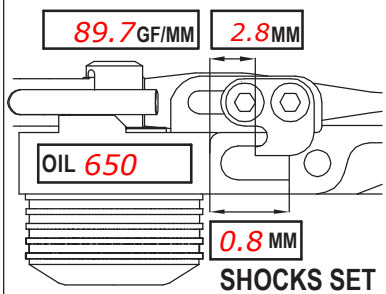

CAMBER ANGLE / °	0,75	SHOCKS SET	
CASTER ANGLE / °	-7		
TOE ANGLE / °	0,75		
RIDE HEIGHT / MM	5,4		
DOWNSTOP / MM	3,6		
UPWNSTOP / MM		ROTOR STD ☑	☐
STABILIZER Ø / MM	1.3	SPRING STD ☑	S ☐
LOW ARM C04M1+8.0 ☑	☐	DAMPER D2.2 ☑	☐
STEER. ARM AM23-1 ☑	☐	SRS/ST69 ARR. I ☑	II ☐
WHEELHUB AM06WL ☑	☐	PSS SETUP 15% ☐	25% ☐
WHEEL SPACER / MM	0		

CHASSIS FLEX AND WEIGHT SETTINGS

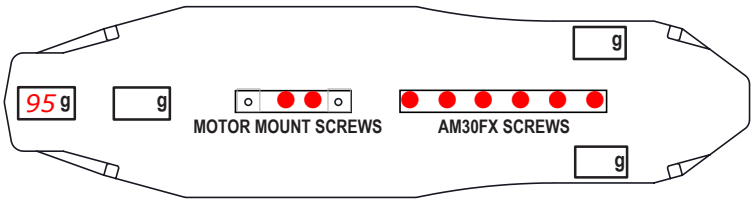

LOWER DECK C01FXCL ☑ C01FXAL ☐ ☐

C26 ☐ ST09 ☐

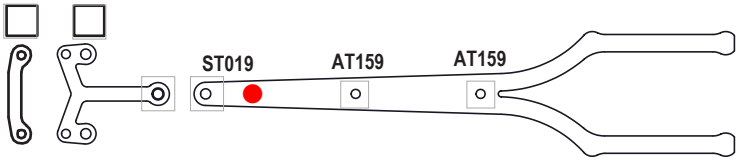

REAR TOP DESK C27FX-2 ☐ ☐

FRONT TOP DESK C107S ☐ C27FX-L ☑

TIRES	Ride ETS		
INSERTS	Ride		
WHEELS	Ride		
ADDITIVE	MR33	TIME - FR 15-20	RR 15-20
TOTAL WEIGHT	1265	WEIGHT DISTRIBUTION - F	% R %
NOTES:			

MOTOR LATERAL SHIFT / MM	ACKERMANN SHIMS / MM
MOTOR Hobbywing 17,5T	SERVO MKS HBL 575SL
SPUR 100 PINION 38 RATIO 5.00	STEER TRAVEL IN max OUT
BODY ZooRacing Gorilla	BATTERY TEAM EAM 4200
WING Std	RECEIVER Sanwa RX493
ESC HW Justock	RADIO Sanwa M17
ESC SETTING	
BEST LAPTIME	QUALIF./FINAL POSITION /

ADC Damper Caps, AT15, MXLR A800R FlexBumper (MAX-09-005), 30g Tungsten glued on C07A front bumper plate, BW95 weight, C27FX-L Topdeck, BW22 Battery weights, AT144, MXLR Servo Arm at 17mm (MAX-09-002)