AWESOMATIX A800FX EVO

SETUP SHEET
VERSION 1.0

NAME	Eason Chen	DATE	28.02~03.03.2024
COUNTRY	Thailand	TEMP. °C AIR / TRACK	/
RACE	2024 TITC		
TRACK	RC Addict Bangkok		

ASPHALT	✔	OUTDOOR	✔	INDOOR	☐	CARPET ☐
TRACK CONDITION		TECHNICAL	☐	MIXED	✔	FAST ☐
TRACTION		LOW	☐	MEDIUM	✔	HIGH ✔

FRONT

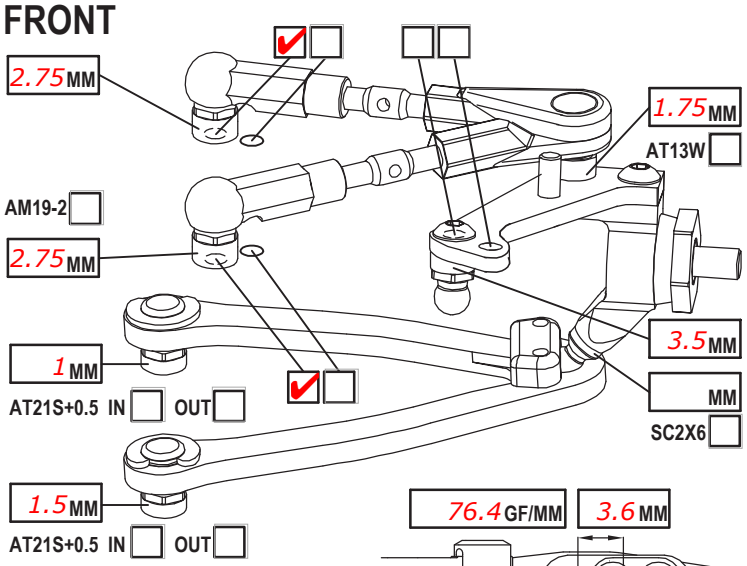

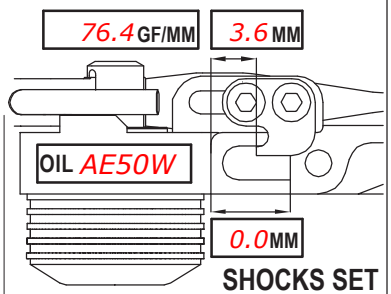

SHOCKS SET

CAMBER ANGLE / °	1		
CASTER ANGLE / °	4		
TOE ANGLE / °	1		
RIDE HEIGHT / MM	5.2		
DOWNSTOP / MM	5.4		
UPWNSTOP / MM			
STABILIZER Ø / MM	1.0		
LOW ARM C04M1+9.0 ☐	+8.0 ✔		
STEER. ARM AM14FX ☐	☐		
WHEELHUB AM06WL ☐	☐		
DRIVE SPOOL ☐	DIFF ✔		
DIFF. OIL	AE 500000		
WHEEL SPACER / MM			

ROTOR	STD ✔		☐
SPRING	STD ✔	S	☐
DAMPER	D2.2 ✔		☐
SRS/ST69 ARR.	I ✔	II	☐
PSS SETUP	15% ☐	25%	✔
	LOW ☐	HIGH	✔
DIFF WASHERS			
STEERING	SBFX ☐	LS	☐

REAR

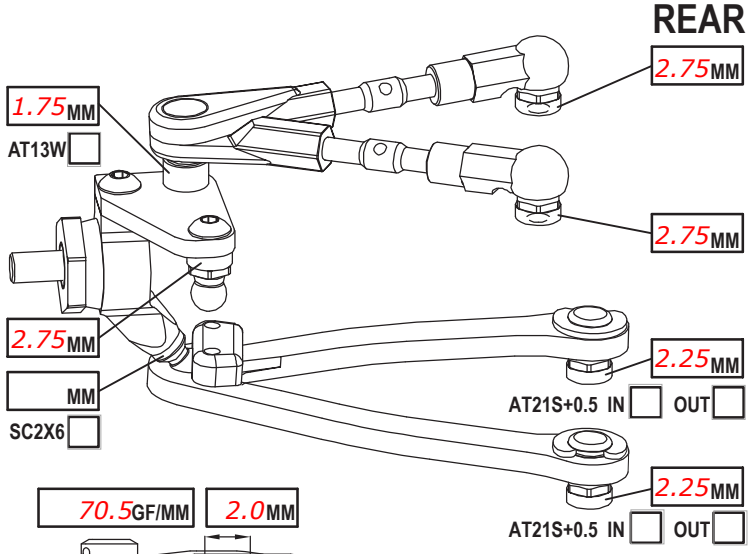

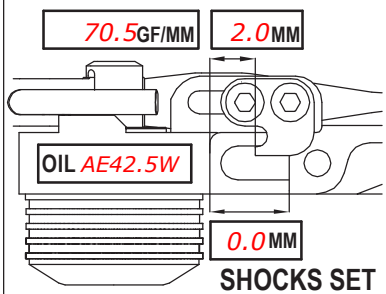

SHOCKS SET

CAMBER ANGLE / °	2		
CASTER ANGLE / °	-2		
TOE ANGLE / °	2		
RIDE HEIGHT / MM	5.4		
DOWNSTOP / MM	4.4		
UPWNSTOP / MM			
STABILIZER Ø / MM	1.2		
LOW ARM C04M1+8.0 ☐	+8.0 ✔		
STEER. ARM AM23-1 ☐	☐		
WHEELHUB AM06WL ☐	☐		
WHEEL SPACER / MM			

ROTOR	STD ✔		☐
SPRING	STD ☐	S	✔
DAMPER	D2.2 ✔		☐
SRS/ST69 ARR.	I ✔	II	☐
PSS SETUP	15% ☐	25%	☐

CHASSIS FLEX AND WEIGHT SETTINGS

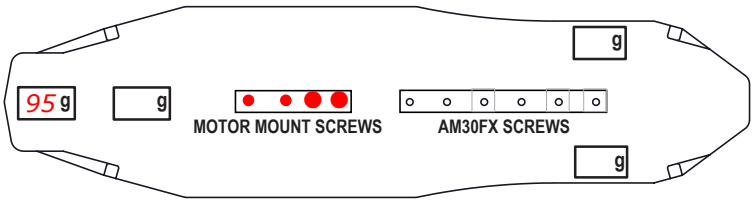

LOWER DECK C01FXCL ☐ C01FXAL ✔ ☐

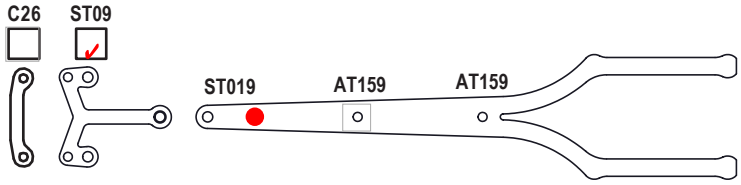

REAR TOP DESK C27FX-2 ☐ ☐

FRONT TOP DESK C107S ☐ C27FX-L ✔

TIRES	RIDE 2024 TITC		
INSERTS			
WHEELS			
ADDITIVE	MG V3 YELLOW	TIME - FR	RR
TOTAL WEIGHT	1260	WEIGHT DISTRIBUTION - F	% R %
NOTES:			

MOTOR LATERAL SHIFT / MM		ACKERMANN SHIMS / MM	
MOTOR	HW HANDOUT 17.5	SERVO	MKS HBL575L
SPUR 99 PINION 47 RATIO	4.00	STEER TRAVEL IN	OUT
BODY	BLITZ YRS	BATTERY	CODDAR 5800
WING		RECEIVER	SANWA 482
ESC	HW JUSTOCK TITC	RADIO	SANWA M17
ESC SETTING			
BEST LAPTIME	17.910	QUALIF./FINAL POSITION	2 / 2

ADC