AWESOMATIX A800FX EVO

SETUP SHEET
VERSION 1.0

NAME	Ben Moorey	DATE 18/08/24	TEMP. °C AIR / TRACK /
COUNTRY	UK	ASPHALT ☑ OUTDOOR ☑ INDOOR ☐	CARPET ☐
RACE	BRCA 2WD National	TRACK CONDITION TECHNICAL ☑	MIXED ☐ FAST ☐
TRACK	Colchester	TRACTION LOW ☐	MEDIUM ☑ HIGH ☐

FRONT

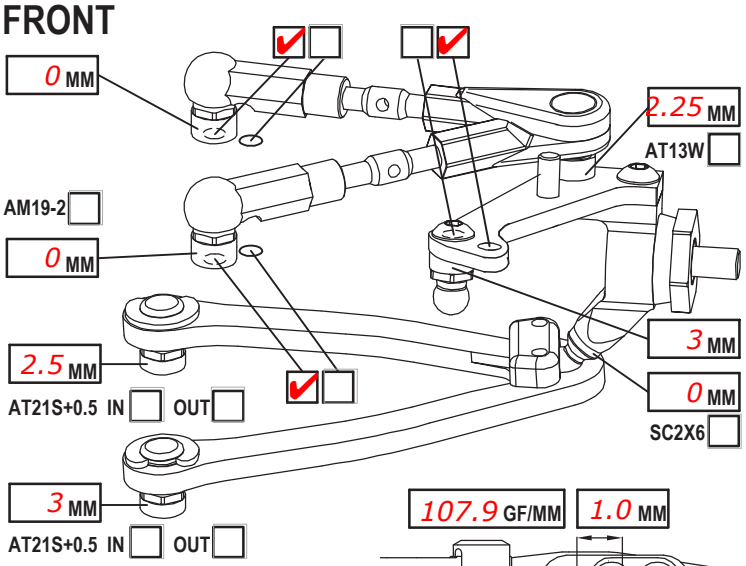

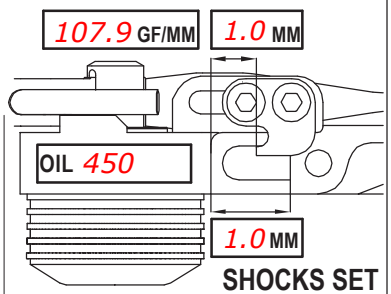

CAMBER ANGLE / °	-2		
CASTER ANGLE / °	5		
TOE ANGLE / °	.5 each side		
RIDE HEIGHT / MM	5.2		
DOWNSTOP / MM	5		
UPWNSTOP / MM			
STABILIZER Ø / MM	1.0		
LOW ARM C04M1+9.0	☐		☐
STEER. ARM AM14FX	☐		☐
WHEELHUB AM06WL	☐		☐
DRIVE SPOOL	☐	DIFF	☑
DIFF. OIL	300k		
WHEEL SPACER / MM			

SHOCKS SET

ROTOR	STD	☑		☐
SPRING	STD	☐	S	☑
DAMPER	D2.2	☐		☐
SRS/ST69 ARR.	I	☑	II	☐
PSS SETUP	15%	☐	25%	☐
	LOW	☑	HIGH	☐
DIFF WASHERS				Kit
STEERING	SBFX	☐	LS	☐

REAR

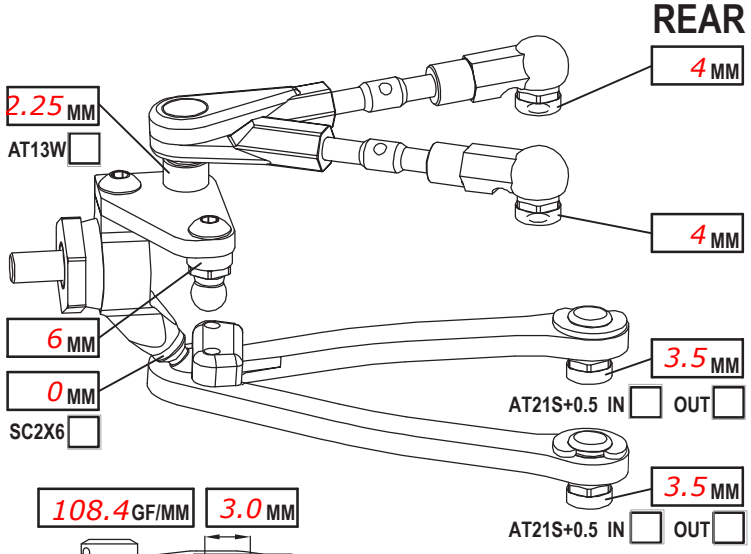

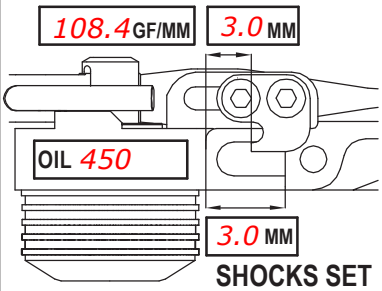

CAMBER ANGLE / °	-2.5		
CASTER ANGLE / °	-4		
TOE ANGLE / °	-1		
RIDE HEIGHT / MM	5.4		
DOWNSTOP / MM	4		
UPWNSTOP / MM			
STABILIZER Ø / MM	1.2		
LOW ARM C04M1+8.0	☐		☐
STEER. ARM AM23-1	☐		☐
WHEELHUB AM06WL	☐		☐
WHEEL SPACER / MM			

SHOCKS SET

ROTOR	STD	☑		☐
SPRING	STD	☑	S	☐
DAMPER	D2.2	☐		☐
SRS/ST69 ARR.	I	☑	II	☐
PSS SETUP	15%	☐	25%	☐

CHASSIS FLEX AND WEIGHT SETTINGS

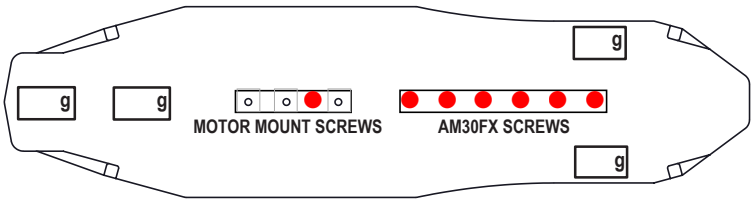

LOWER DECK C01FXCL ☐ C01FXAL ☐ ☐

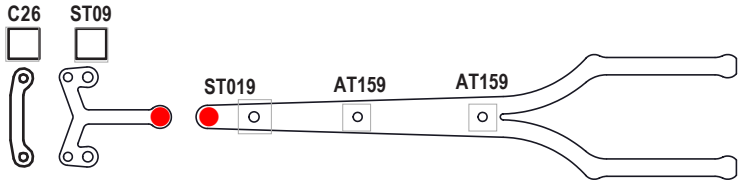

REAR TOP DESK C27FX-2 ☐ ☐

FRONT TOP DESK C107S ☐ ☐

TIRES	RI-26074-24		
INSERTS			
WHEELS			
ADDITIVE	Spider Red	TIME - FR 15	RR 15
TOTAL WEIGHT	1260	WEIGHT DISTRIBUTION - F	% R %
NOTES:			

MOTOR LATERAL SHIFT / MM	ACKERMANN SHIMS / MM
MOTOR HW Fixed 17.5	SERVO
SPUR 88 PINION 61 RATIO 2.74	STEER TRAVEL IN OUT
BODY Gorilla	BATTERY
WING std	RECEIVER
ESC HW Fixed	RADIO
ESC SETTING 15k Rev Limit	
BEST LAPTIME 14.6	QUALIF./FINAL POSITION 1 / 1