AWESOMATIX A800FX EVO

SETUP SHEET
VERSION 1.0

NAME	Ben Moorey	DATE 03/09/23	TEMP. °C AIR / TRACK /
COUNTRY	UK	ASPHALT ✔ OUTDOOR ✔ INDOOR ☐	CARPET ☐
RACE	BRCA 2WD Nationals	TRACK CONDITION TECHNICAL ☐	MIXED ✔ FAST ☐
TRACK	Aldershot	TRACTION LOW ☐	MEDIUM ✔ HIGH ☐

FRONT

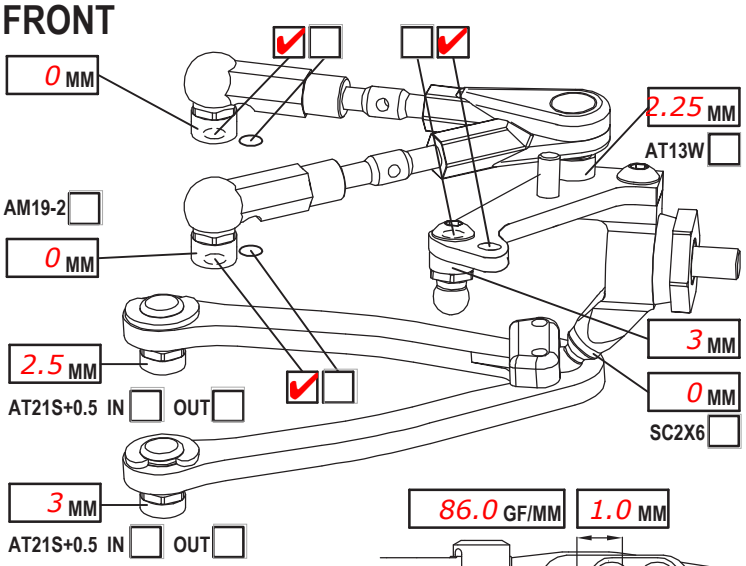

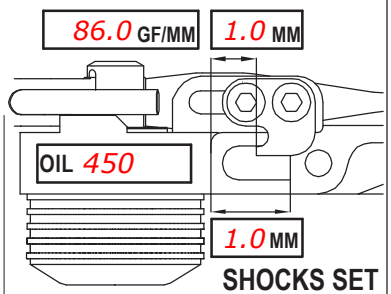

CAMBER ANGLE / °	-2	SHOCKS SET	
CASTER ANGLE / °	-5	ROTOR STD ✔	☐
TOE ANGLE / °	+1	SPRING STD ☐	S ✔
RIDE HEIGHT / MM	5.6	DAMPER D2.2 ☐	☐
DOWNSTOP / MM	5.4	SRS/ST69 ARR. I ✔	II ☐
UPWNSTOP / MM		PSS SETUP 15% ☐	25% ☐
STABILIZER Ø / MM	1.0	LOW ✔	HIGH ☐
LOW ARM C04M1+9.0 ✔	☐	DIFF WASHERS	
STEER. ARM AM14FX ✔	☐	STEERING SBFX ☐	LS ☐
WHEELHUB AM06WL ✔	☐		
DRIVE SPOOL ☐	DIFF ✔		
DIFF. OIL	500k		
WHEEL SPACER / MM	0		

REAR

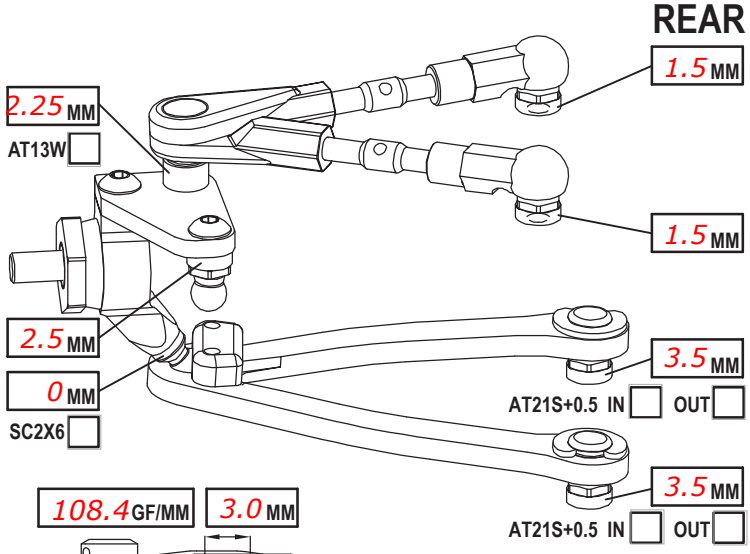

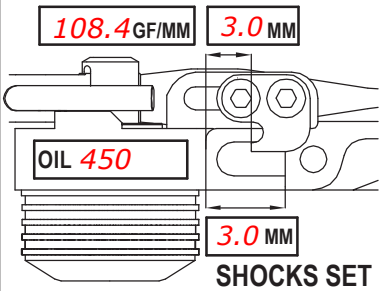

CAMBER ANGLE / °	-2.5	SHOCKS SET	
CASTER ANGLE / °	-2	ROTOR STD ✔	☐
TOE ANGLE / °	-1	SPRING STD ✔	S ☐
RIDE HEIGHT / MM	5.8	DAMPER D2.2 ☐	☐
DOWNSTOP / MM	4.0	SRS/ST69 ARR. I ✔	II ☐
UPWNSTOP / MM		PSS SETUP 15% ☐	25% ☐
STABILIZER Ø / MM	1.2		
LOW ARM C04M1+8.0 ✔	☐		
STEER. ARM AM23-1 ☐	☐		
WHEELHUB AM06WL ☐	☐		
WHEEL SPACER / MM			

CHASSIS FLEX AND WEIGHT SETTINGS

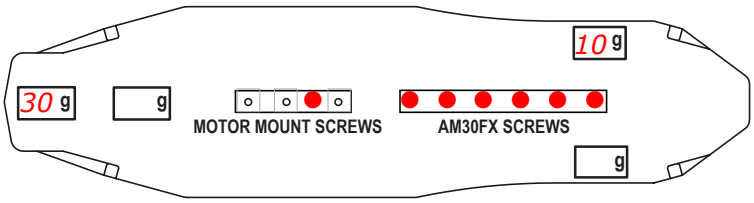

LOWER DECK C01FXCL ☐ C01FXAL ☐ ☐

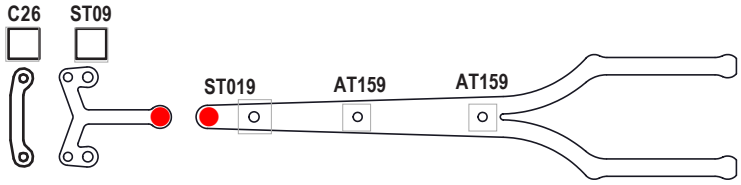

REAR TOP DESK C27FX-2 ☐ ☐
FRONT TOP DESK C107S ☐ ☐

TIRES	Ride		
INSERTS	std		
WHEELS	std		
ADDITIVE	Spider Red	TIME - FR 15	RR 15
TOTAL WEIGHT	1280	WEIGHT DISTRIBUTION - F	% R %
NOTES:			

MOTOR LATERAL SHIFT / MM 0	ACKERMANN SHIMS / MM 0
MOTOR Hobbywing	SERVO
SPUR PINION 1 RATIO 0.00	STEER TRAVEL IN OUT
BODY Gorilla	BATTERY
WING std	RECEIVER
ESC Hobbywing	RADIO
ESC SETTING 15k Limit	
BEST LAPTIME 15.89	QUALIF./FINAL POSITION 1 / 1