A800

SETUP SHEET

Alterations by Arn0 at PetitRC.com

NAME	Sam Isaacs	DATE	7/9/16
COUNTRY		TEMP.°C AIR / TRACK	95°F / 140°F
RACE	JMR Club Race		
TRACK	JMR		

		CARPET ☐		ASPHALT ☑
TRACK CONDITION	TECHNICAL ☐	MIXED ☑		FAST ☐
TRACTION	LOW ☑	MEDIUM ☑		HIGH ☐

FRONT

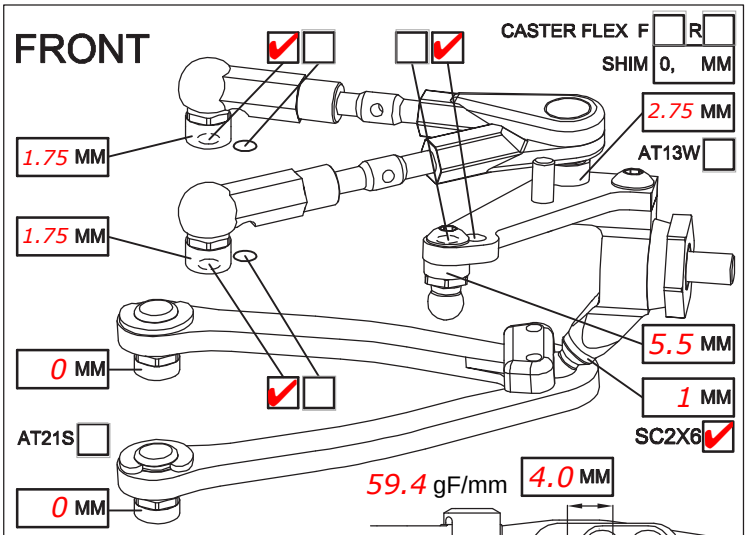

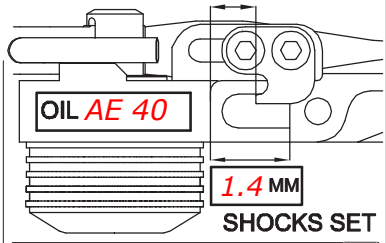

CAMBER ANGLE / °	2			
CASTER ANGLE / °	4			
TOE ANGLE / °	.5 out			
RIDE HEIGHT / MM	5.5			
DOWNSTOP / MM	2.0 ORH			
UPSTOP / MM				
STABILIZER Ø / MM	1.2			
LOW ARM	C04AL ☑			☐
STEERING ARM	STD ☑			☐
WHEEL SPACER / MM	0			
FRONT DRIVE	☐	GD3 ☐	SPOOL ☑	GD2B ☐
DIFF OIL		DIFF WASHERS		
DOGBONE DRIVE	ST17-1 ☐	ST11 ☐	ST12 ☐	BB ☐	ST02 ☐

SHOCKS SET

ROTOR	STD ☑		☐
SPRING	STD ☑	S	☐
DAMPER	D2.1 ☐		D2.2 ☑
ACTION	SYM. ☐		ASYM. ☐
SRS/RHS ARR.	I ☐		II ☑

REAR

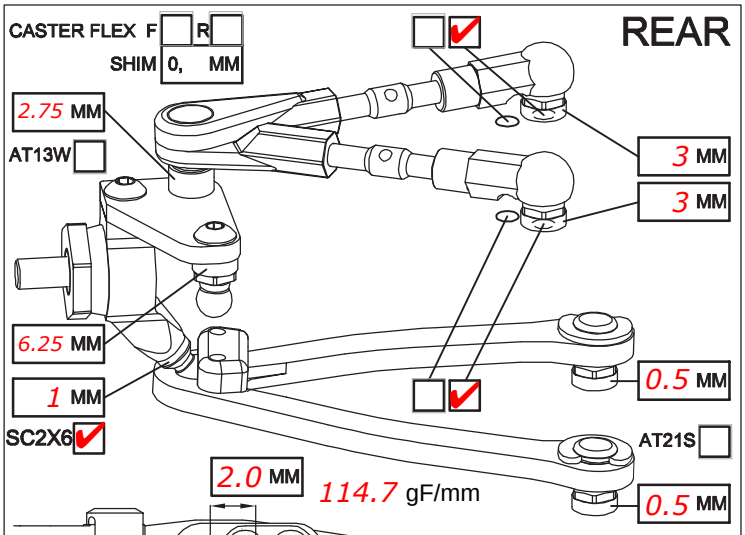

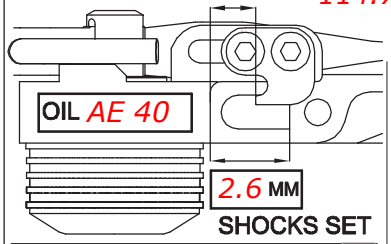

CAMBER ANGLE / °	1.5			
CASTER ANGLE / °	4 long			
TOE ANGLE / °	2.25			
RIDE HEIGHT / MM	5.5			
DOWNSTOP / MM	2.5 ORH			
UPSTOP / MM				
STABILIZER Ø / MM	1.2			
LOW ARM	C04AL ☑			☐
STEERING ARM	STD ☑			☐
WHEEL SPACER / MM	0			
REAR DRIVE	☐	GD3R ☐	GD2B ☑	
DIFF OIL	5K	DIFF WASHERS		
DOGBONE DRIVE	ST11 ☐	ST12 ☐	BB ☐	ST17-1 ☐	EVD ☐

SHOCKS SET

ROTOR	STD ☑		☐
SPRING	STD ☑	S	☐
DAMPER	D2.1 ☐		D2.2 ☑
ACTION	SYM. ☐		ASYM. ☐
SRS/RHS ARR.	I ☑		II ☐

FRAME FLEX SETTING

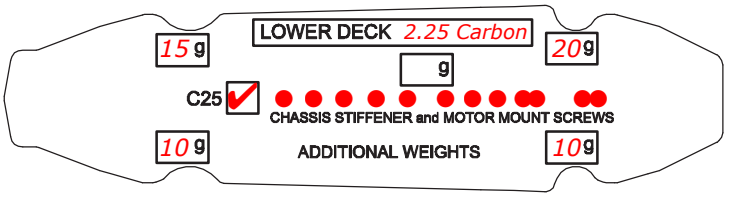

CHASSIS STIFFENER AM110 ☐ AM115 ☐ ST130 ☐

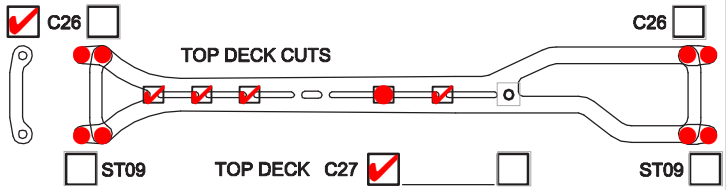

COMMENTS

Heavy 65G center brace (ST 165)
10grams in front of motor, ten behind with
Fan. 10grams under receiver

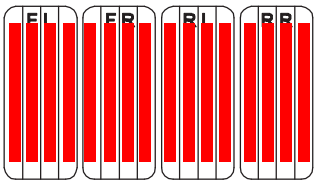

TIRES	FRONT	REAR
BRAND	TP 36	TP 36
INSERTS		
WHEELS		
ADDITIVE	SXT 3.0	SXT 3.0

MOTOR LATERAL SHIFT / MM	0	MOTOR	R1 5.5
ACKERMANN SHIMS / MM	0	SERVO	Sanwa
DRIVE RATIO	1.9	ESC	Hobbywing XR10 PRo
SPUR 114	PINION 27	BATTERY	R1 6200
BODY	IS 200 Max Forward	RECEIVER	Sanwa
WING	Stock		

BEST LAPTIME		QUALIF. / FINAL POSITION	/
ESC SETTING			
COMMENTS / IMPRESSIONS			

10 min SXT, no warmers (try warmers)

CONTACT