A800

SETUP SHEET

Alterations by Arn0 at PetitRC.com

NAME	Ollie Bultynck	DATE	27-28/02/2016	TEMP.°C AIR / TRACK	20°C / 20°C
COUNTRY	Belgium			CARPET ✔	ASPHALT ☐
RACE	Belgian Nats Round1	TRACK CONDITION	TECHNICAL ☐	MIXED ✔	FAST ✔
TRACK	GTM-RC	TRACTION	LOW ✔	MEDIUM ✔	HIGH ☐

FRONT

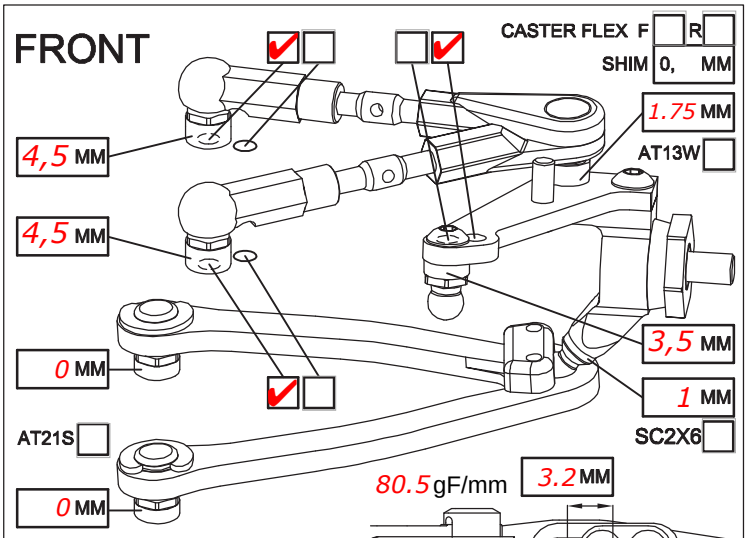

80.5 gF/mm

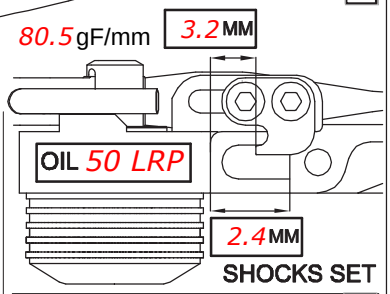

SHOCKS SET

CAMBER ANGLE / °	2	ROTOR	STD ✔	☐
CASTER ANGLE / °	4	SPRING	STD ☐	S ✔
TOE ANGLE / °	-1° each side	DAMPER	D2.1 ✔	☐
RIDE HEIGHT / MM	5.2	ACTION	SYM. ✔	ASYM. ☐
DOWNSTOP / MM	5.4	SRS/RHS ARR.	I ✔	II ☐
UPSTOP / MM	-			
STABILIZER Ø / MM	1.1			
LOW ARM	C04AL ☐ +0,5 ✔			
STEERING ARM	STD ✔ ☐			
WHEEL SPACER / MM	-			

FRONT DRIVE ☐ GD3 ☐ SPOOL ✔ GD2B ☐

DIFF OIL | DIFF WASHERS

DOGBONE DRIVE ST17-1 ✔ ST11 ☐ ST12 ☐ BB ✔ ST02 ☐

REAR

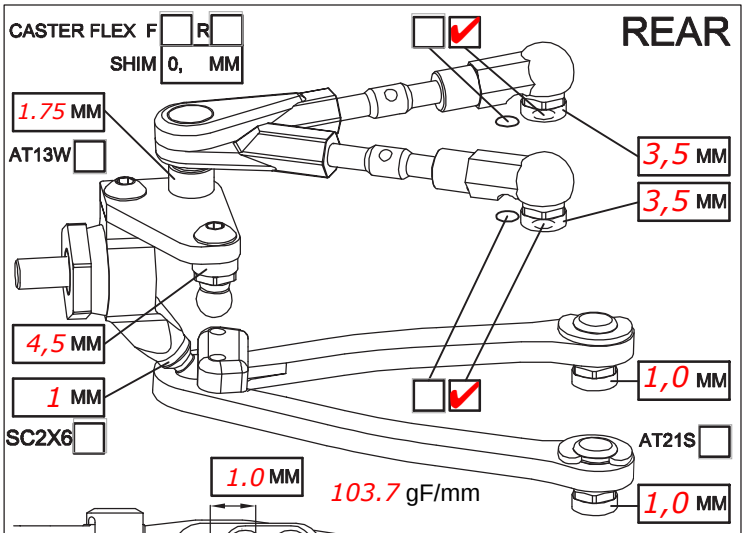

103.7 gF/mm

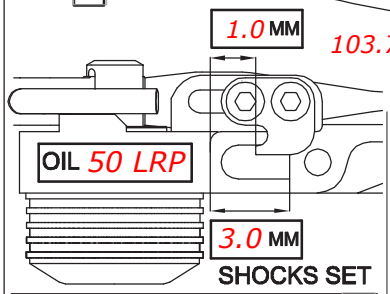

SHOCKS SET

CAMBER ANGLE / °	2	ROTOR	STD ✔	☐
CASTER ANGLE / °	-6	SPRING	STD ☐	S ✔
TOE ANGLE / °	2.0	DAMPER	D2.1 ✔	☐
RIDE HEIGHT / MM	5.4	ACTION	SYM. ✔	ASYM. ☐
DOWNSTOP / MM	4.4	SRS/RHS ARR.	I ✔	II ☐
UPSTOP / MM				
STABILIZER Ø / MM	1.1			
LOW ARM	C04AL ☐ +0.5 ✔			
STEERING ARM	STD ✔ ☐			
WHEEL SPACER / MM	-			

REAR DRIVE ☐ GD3R ☐ GD2B ✔

DIFF OIL 7000 | DIFF WASHERS large

DOGBONE DRIVE ST11 ☐ ST12 ☐ BB ✔ ST17-1 ☐ EVD ☐

FRAME FLEX SETTING

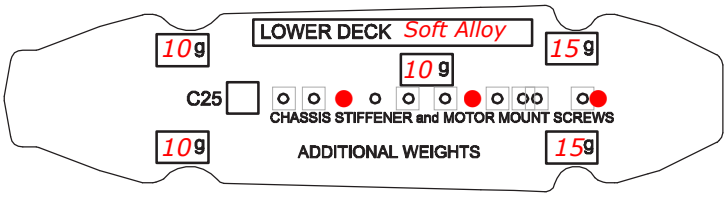

CHASSIS STIFFENER AM110 ☐ AM115 ☐ ST130 ☐

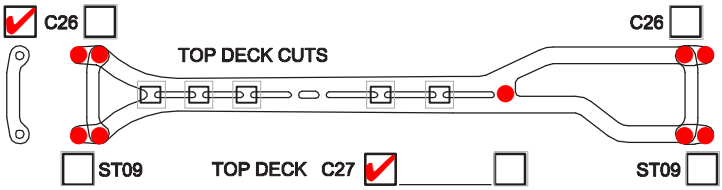

COMMENTS

Car was very good and high cornerspeed.

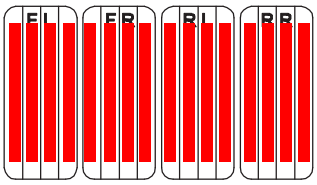

TIRES	FRONT	REAR
BRAND	Volante ETS	Volante ETS
INSERTS		
WHEELS		
ADDITIVE	LRP3	LRP3

MOTOR LATERAL SHIFT / MM		MOTOR	LRP X20 5T
ACKERMANN SHIMS / MM	1	SERVO	Awesomatix
DRIVE RATIO		ESC	LRP FLow WT
SPUR 153	PINION	BATTERY	LRP 5600 LCG
BODY	PF Speed6 lightweight (87g)	RECEIVER	Futaba
WING	Roche Wing		

BEST LAPTIME 11.4 | QUALIF. / FINAL POSITION /

ESC SETTING

COMMENTS / IMPRESSIONS

Used 0,5mm wider Carbon suspension Arms on front and rear of the car. Also used front +0.5mm wider front suspension balls. Balls are 0.5mm higher. New Chassis stiffener ST165

CONTACT