A800

SETUP SHEET

Alterations by Arn0 at PetitRC.com

NAME	Max Mächler	DATE	28-31.07.2016
COUNTRY	Germany	TEMP.°C AIR / TRACK	38°C / °C
RACE	Hot Race Cup Riccione 2016		
TRACK	Road Race Riccione		

		CARPET ☐	ASPHALT ☑	
TRACK CONDITION	TECHNICAL ☐	MIXED ☑	FAST ☐	
TRACTION	LOW ☐	MEDIUM ☑	HIGH ☐	

FRONT

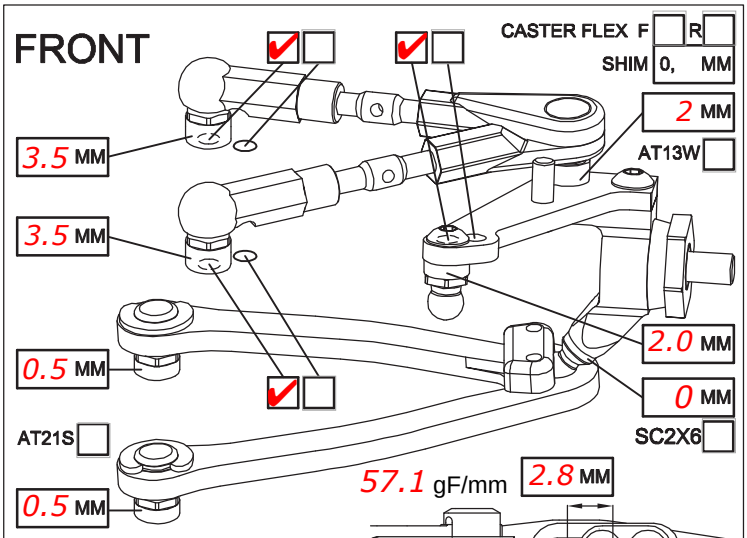

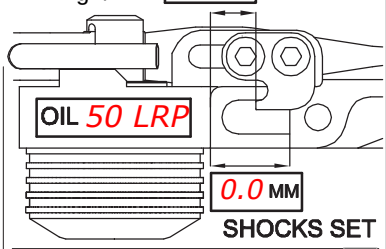

SHOCKS SET

CAMBER ANGLE / °	-2		
CASTER ANGLE / °	4		
TOE ANGLE / °	1° open each side		
RIDE HEIGHT / MM	5.2		
DOWNSTOP / MM	5,6		
UPSTOP / MM			
STABILIZER Ø / MM	1.0		
LOW ARM	C04AL ☑	+0,5 ☐	
STEERING ARM	STD ☐	AM14A ☑	
WHEEL SPACER / MM	0		
FRONT DRIVE	☐		
DIFF OIL		DIFF WASHERS	
DOGBONE DRIVE	ST17-1 ☑	ST11 ☐	ST12 ☐

ROTOR	STD ☑	☐
SPRING	STD ☑	S ☐
DAMPER	D2.1 ☑	☐
ACTION	SYM. ☑	ASYM. ☐
SRS/RHS ARR.	I ☐	II ☑
	GD3 ☐	SPOOL ☑ GD2B ☐
	BB ☑	ST02 ☐

REAR

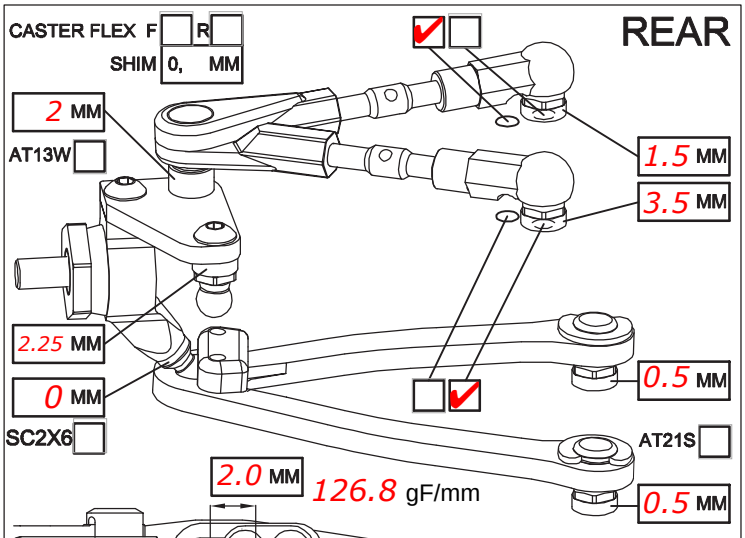

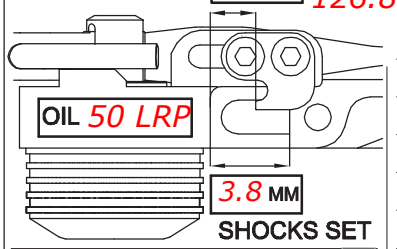

SHOCKS SET

CAMBER ANGLE / °	-2		
CASTER ANGLE / °	-5		
TOE ANGLE / °	2.0		
RIDE HEIGHT / MM	5,4		
DOWNSTOP / MM	4,4		
UPSTOP / MM			
STABILIZER Ø / MM	1.1		
LOW ARM	C04AL ☑	☐	
STEERING ARM	STD ☑	☐	
WHEEL SPACER / MM	0		
REAR DRIVE	☐	GD3R ☐	GD2B ☑
DIFF OIL	7000 LRP	DIFF WASHERS	std
DOGBONE DRIVE	ST11 ☐	ST12 ☐	BB ☑ ST17-1 ☐ EVD ☐

ROTOR	STD ☑	☐
SPRING	STD ☑	S ☐
DAMPER	D2.1 ☐	☐
ACTION	SYM. ☑	ASYM. ☐
SRS/RHS ARR.	I ☑	II ☐

FRAME FLEX SETTING

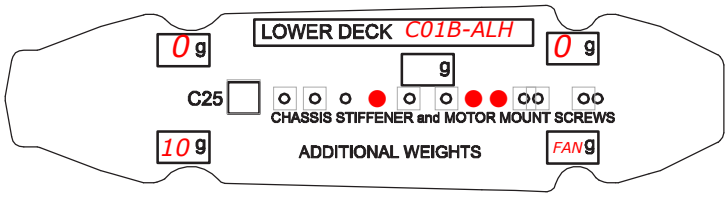

CHASSIS STIFFENER AM110 ☑ AM115 ☐ ST130 ☐

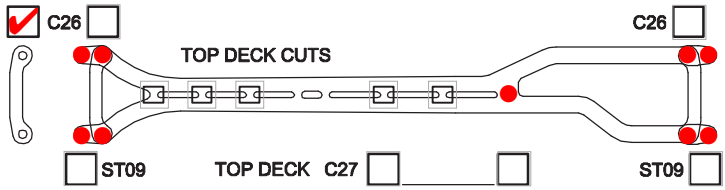

TIRES

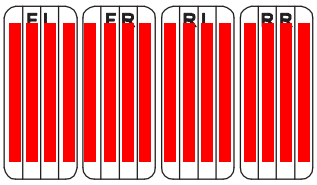

	FRONT	REAR
BRAND	Hot Race 36	Hot Race 36
INSERTS		
WHEELS		
ADDITIVE	Hot Race	Hot Race

MOTOR LATERAL SHIFT / MM	1mm	MOTOR	13.5t
ACKERMANN SHIMS / MM	0	SERVO	Futaba BLS551
DRIVE RATIO	4,5	ESC	LRP Flow WT
SPUR 100	PINION 42	BATTERY	LRP 7500 SS
BODY	PF Mazda Speed 6 lw	RECEIVER	Futaba
WING	std		

BEST LAPTIME	19,0	QUALIF. / FINAL POSITION	2 / 2
ESC SETTING	0-Boost		

COMMENTS

FF AT21+0,5
FR normal AT21
RF AT21+0,5
RR AT21+0,5
New steering arms in front, used the inner hole.
All shims like written in the setupsheet.
0,5mm shim under AM110

COMMENTS / IMPRESSIONS

Note SRS Mode II only in front !
Rear springs bend to 110°.
AM06W front and rear.
Inner holes used at LS Steering Set
VTD f+r mount cutted ,only rear brace+MM support
Battery plugs in rear position

CONTACT Max@Awesomatix.com