A800

SETUP SHEET

Alterations by Arn0 at PetitRC.com

NAME	Ed IJzerman	DATE	19-12-2015
COUNTRY	Neterlands	TEMP.°C AIR / TRACK	20°C / 20°C
RACE	Practise		
TRACK	PK Racing		

		CARPET ✔		ASPHALT ☐
TRACK CONDITION	TECHNICAL ☐	MIXED ✔		FAST ☐
TRACTION	LOW ☐	MEDIUM ✔		HIGH ☐

FRONT

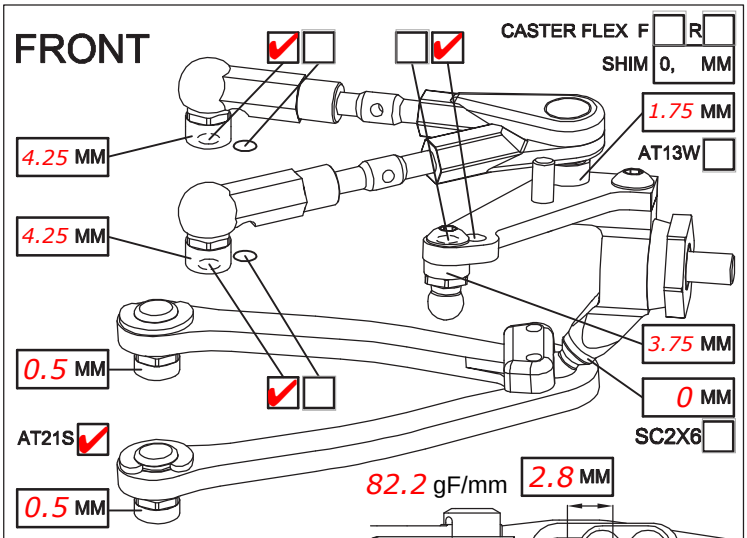

82.2 gF/mm

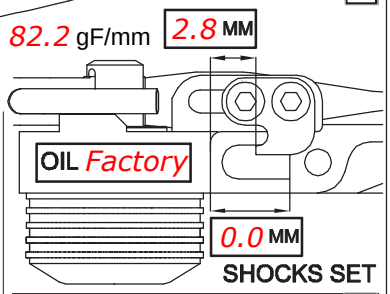

SHOCKS SET

CAMBER ANGLE / °	2			
CASTER ANGLE / °	4			
TOE ANGLE / °	0.5			
RIDE HEIGHT / MM	5.1			
DOWNSTOP / MM	6.1			
UPSTOP / MM	2	ROTOR	STD ✔	☐
STABILIZER Ø / MM	1.3	SPRING	STD ✔	S ☐
LOW ARM C04AL ☐	✔	DAMPER	D2.1 ☐	☐
STEERING ARM STD ☐	✔	ACTION	SYM. ☐	ASYM. ☐
WHEEL SPACER / MM	-	SRS/RHS ARR.	I ✔	II ☐
FRONT DRIVE	☐	GD3 ☐	SPOOL ✔	GD2B ☐
DIFF OIL	DIFF WASHERS			
DOGBONE DRIVE	ST17-1 ☐	ST11 ☐	ST12 ☐	BB ☐ ST02 ☐

REAR

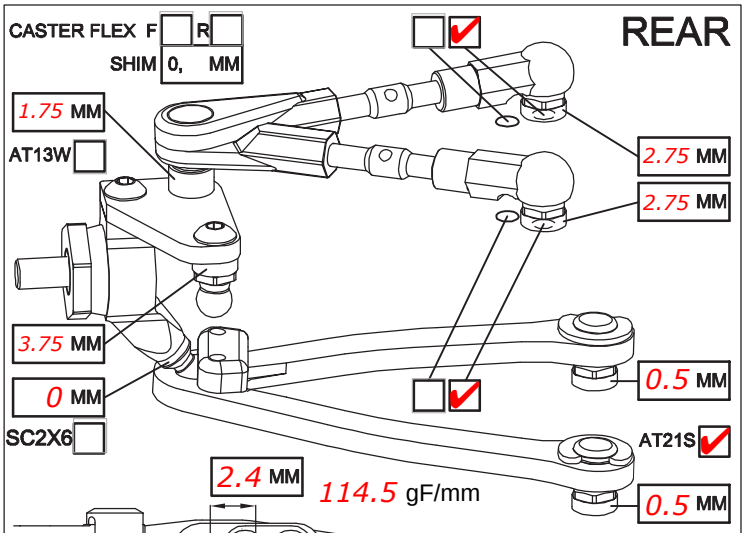

114.5 gF/mm

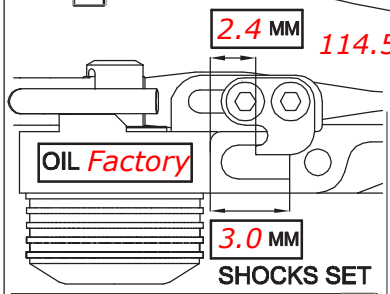

SHOCKS SET

CAMBER ANGLE / °	2			
CASTER ANGLE / °	-4			
TOE ANGLE / °	3			
RIDE HEIGHT / MM	5.5			
DOWNSTOP / MM	5.5			
UPSTOP / MM	-	ROTOR	STD ✔	☐
STABILIZER Ø / MM	1.1	SPRING	STD ✔	S ☐
LOW ARM C04AL ☐	✔	DAMPER	D2.1 ☐	☐
STEERING ARM STD ☐	✔	ACTION	SYM. ☐	ASYM. ☐
WHEEL SPACER / MM	-	SRS/RHS ARR.	I ✔	II ☐
REAR DRIVE	☐	GD3R ☐	GD2B ✔	
DIFF OIL	500Cst	DIFF WASHERS		
DOGBONE DRIVE	ST11 ☐	ST12 ☐	BB ☐	ST17-1 ☐ EVD ☐

FRAME FLEX SETTING

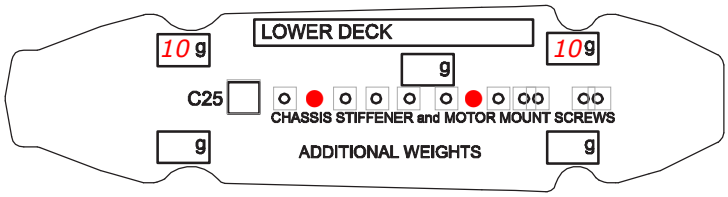

CHASSIS STIFFENER AM110 ✔ AM115 ☐ ST130 ☐

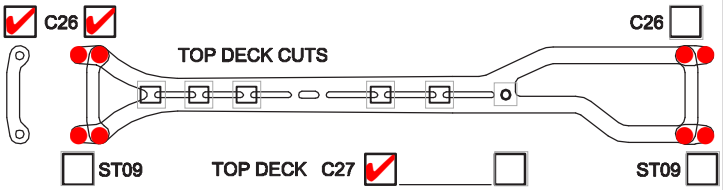

COMMENTS

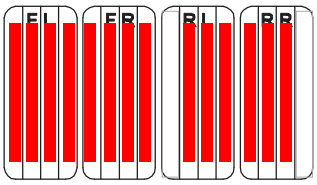

TIRES	FRONT	REAR
BRAND		
INSERTS		
WHEELS		
ADDITIVE		

MOTOR LATERAL SHIFT / MM	0	MOTOR	SKYRc 10.5
ACKERMANN SHIMS / MM	1	SERVO	Savox 1252
DRIVE RATIO	6.4	ESC	SKYRc toro 120
SPUR 84	PINION 28	BATTERY	Hobbyking 7.5
BODY	LTC-R Protoform	RECEIVER	Spektrum
WING	With Body		

BEST LAPTIME	8.5	QUALIF. / FINAL POSITION	/
ESC SETTING	15 Boost		

COMMENTS / IMPRESSIONS

CONTACT