A800

SETUP SHEET

Alterations by Arn0 at PetitRC.com

NAME	COLIN JACKSON
COUNTRY	UK (INDOOR ETS CARPET)
RACE	RUG RACERS 2016/17 RD1
TRACK	WOODSON PARK HERTS

DATE 2/10/2016 — TEMP.°C AIR / TRACK 20°C / N/A°C

		CARPET ✔	ASPHALT ☐
TRACK CONDITION	TECHNICAL ☐	MIXED ✔	FAST ☐
TRACTION	LOW ☐	MEDIUM ☐	HIGH ✔

FRONT

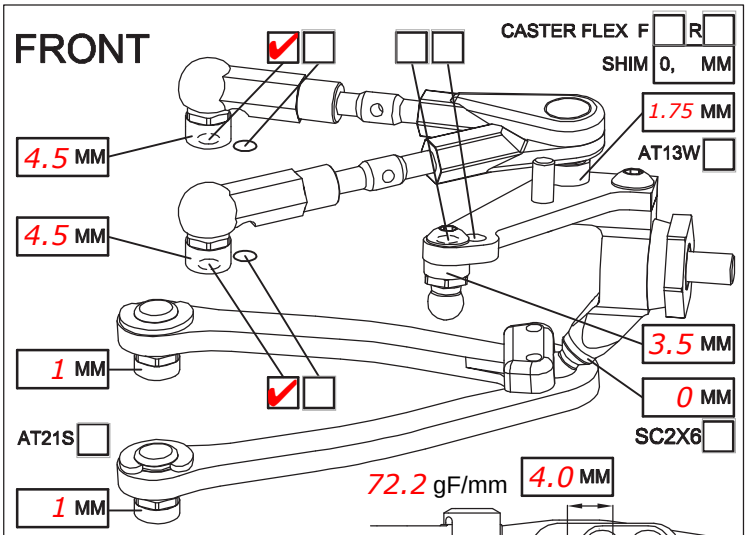

72.2 gF/mm

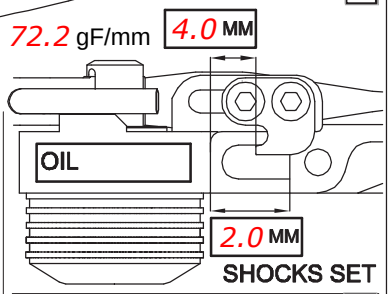

SHOCKS SET

CAMBER ANGLE / °	1.5	
CASTER ANGLE / °	4	
TOE ANGLE / °	1 OUT EACH SIDE	
RIDE HEIGHT / MM	5.2	
DOWNSTOP / MM	6.0	
UPSTOP / MM		
STABILIZER Ø / MM	1.2	
LOW ARM	C04AL ☐	C04M+0.5 ✔
STEERING ARM	STD ✔	☐
WHEEL SPACER / MM	0	

ROTOR	STD ✔	☐
SPRING	STD ☐	S ✔
DAMPER	D2.1 ☐	D 2.2 ✔
ACTION	SYM. ☐	ASYM. ☐
SRS/RHS ARR.	I ✔	II ☐

FRONT DRIVE ☐ GD3 ☐ SPOOL ✔ GD2B ☐

DIFF OIL N/A — DIFF WASHERS N/A

DOGBONE DRIVE ST17-1 ✔ ST11 ☐ ST12 ☐ BB ☐ ST02 ☐

REAR

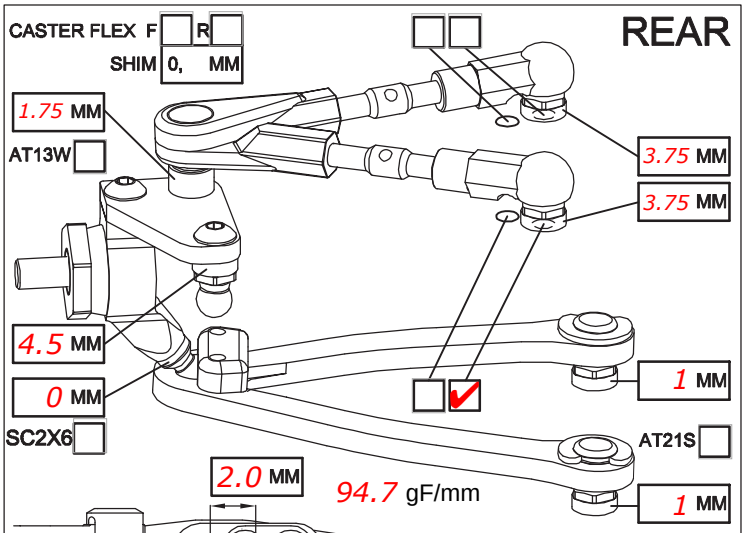

94.7 gF/mm

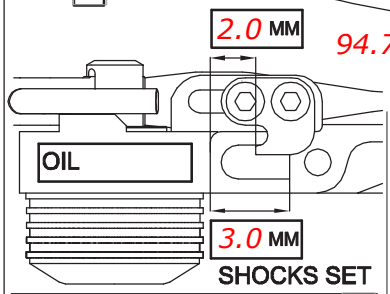

SHOCKS SET

CAMBER ANGLE / °	2	
CASTER ANGLE / °	-4 (SHORT)	
TOE ANGLE / °	2.25	
RIDE HEIGHT / MM	5.4	
DOWNSTOP / MM	5.5	
UPSTOP / MM		
STABILIZER Ø / MM	1.0	
LOW ARM	C04AL ☐	C04M ✔
STEERING ARM	STD ✔	☐
WHEEL SPACER / MM	0	

ROTOR	STD ✔	☐
SPRING	STD ☐	S ✔
DAMPER	D2.1 ☐	D2.2 ✔
ACTION	SYM. ☐	ASYM. ☐
SRS/RHS ARR.	I ✔	II ☐

REAR DRIVE ☐ GD3R ✔ GD2B ☐

DIFF OIL 5K — DIFF WASHERS STD

DOGBONE DRIVE ST11 ✔ ST12 ☐ BB ☐ ST17-1 ☐ EVD ☐

FRAME FLEX SETTING

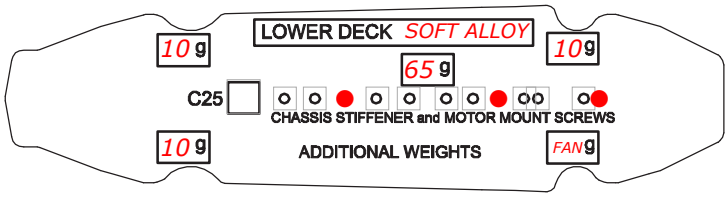

CHASSIS STIFFENER AM110 ☐ AM115 ☐ ST130 ☐

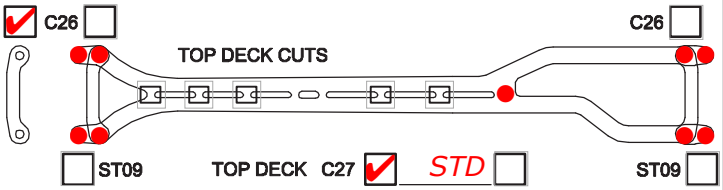

COMMENTS

AM19-4 REAR CAMBER LINK BRACE
ST165 SPACED UP 0.5MM
WHITE CNC DIFF PULLEYS
AMO6W USED
SINGLE HOLE (NEW KIT) STEERING ARMS
CARBON BUMPER BRACE
5G UNDER F + R DIFF GEAR

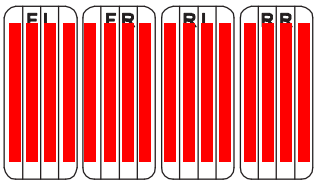

TIRES	FRONT	REAR
BRAND	SOREX	
INSERTS	RK	
WHEELS	REVLIGHT	
ADDITIVE	LRP CARPET 2	15MINS

MOTOR LATERAL SHIFT / MM	0	MOTOR	REEDY 17.5 1S
ACKERMANN SHIMS / MM	1	SERVO	AMTX
DRIVE RATIO	4.01	ESC	ORION R10.1
SPUR 95	PINION 45	BATTERY	ORION 5800
BODY	LTCR LW	RECEIVER	KO
WING	STD		WEIGHT 1352

BEST LAPTIME 12.56 — QUALIF. / FINAL POSITION TQ / WIN

ESC SETTING BLINKY

COMMENTS / IMPRESSIONS

FRONT BALLS;
FF - AT21+0.5
FR - AT21
RF - AT21
RR - AT21

RAN SMEAR OF DIFF OIL ON CHASSIS EDGE TO STOP RUBBING AROUND BUMPY SWEEPER.

CONTACT COLIN124123@GMAIL.COM