A800

SETUP SHEET

Alterations by Arn0 at PetitRC.com

NAME	Bert de Winter	DATE 02-01-2016	TEMP.°C AIR / TRACK 20°C / 20°C
COUNTRY	the Netherlands		
RACE	Practice		
TRACK	PK Racing Dordrecht		

		CARPET ✔		ASPHALT ☐
TRACK CONDITION	TECHNICAL ☐	MIXED ✔		FAST ☐
TRACTION	LOW ☐	MEDIUM ✔		HIGH ☐

FRONT

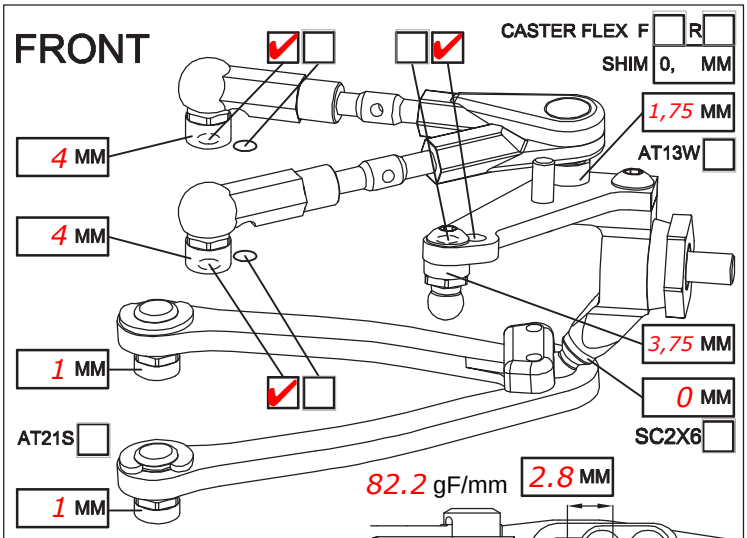

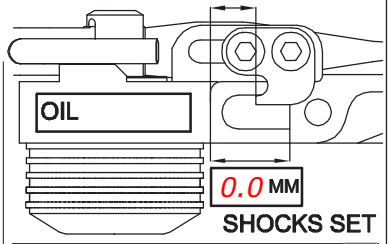

SHOCKS SET

CAMBER ANGLE / °	2			
CASTER ANGLE / °	2			
TOE ANGLE / °	1			
RIDE HEIGHT / MM	5.6			
DOWNSTOP / MM	4.6			
UPSTOP / MM		ROTOR	STD ✔	☐
STABILIZER Ø / MM	1.3	SPRING	STD ✔	S ☐
LOW ARM C04AL ☐	✔	DAMPER	D2.1 ☐	☐
STEERING ARM STD ☐	✔	ACTION	SYM. ☐	ASYM. ☐
WHEEL SPACER / MM		SRS/RHS ARR.	I ✔	II ☐

FRONT DRIVE ☐ GD3 ☐ SPOOL ✔ GD2B ☐

DIFF OIL | DIFF WASHERS

DOGBONE DRIVE ST17-1 ☐ ST11 ☐ ST12 ☐ BB ☐ ST02 ☐

REAR

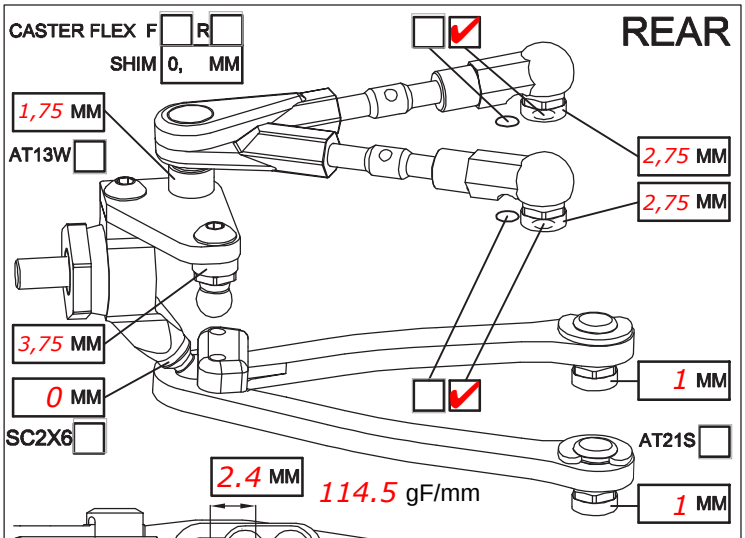

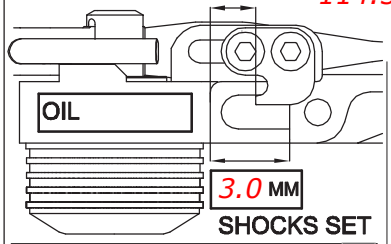

SHOCKS SET

CAMBER ANGLE / °	2			
CASTER ANGLE / °	2			
TOE ANGLE / °	2.5			
RIDE HEIGHT / MM	6			
DOWNSTOP / MM	4.1			
UPSTOP / MM		ROTOR	STD ✔	☐
STABILIZER Ø / MM	1.1	SPRING	STD ✔	S ☐
LOW ARM C04AL ☐	✔	DAMPER	D2.1 ☐	☐
STEERING ARM STD ☐	✔	ACTION	SYM. ☐	ASYM. ☐
WHEEL SPACER / MM		SRS/RHS ARR.	I ✔	II ☐

REAR DRIVE ☐ GD3R ☐ GD2B ✔

DIFF OIL 6000 | DIFF WASHERS

DOGBONE DRIVE ST11 ☐ ST12 ☐ BB ☐ ST17-1 ☐ EVD ☐

FRAME FLEX SETTING

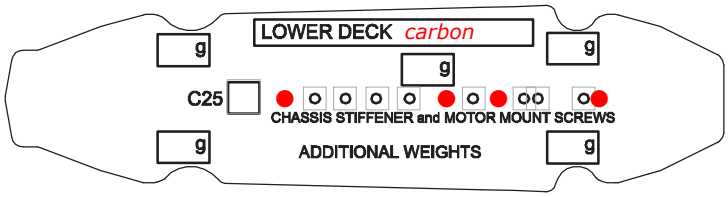

CHASSIS STIFFENER AM110 ✔ AM115 ☐ ST130 ☐

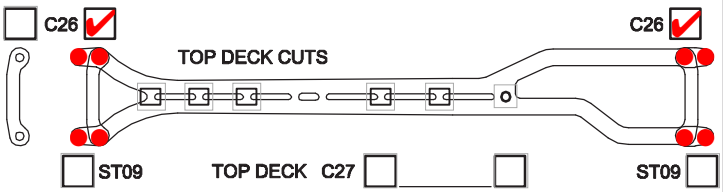

COMMENTS

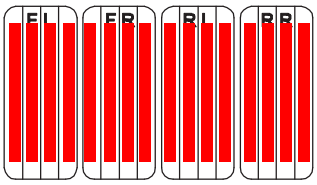

TIRES	FRONT	REAR
BRAND		sorex
INSERTS		JB
WHEELS		
ADDITIVE		CS HG

MOTOR LATERAL SHIFT / MM	0	MOTOR	LRP 10.5
ACKERMANN SHIMS / MM	1	SERVO	sanwa
DRIVE RATIO	5.18	ESC	LRP
SPUR 29	PINION 79	BATTERY	Hobbyking 6.6
BODY	LTC-R Protoform	RECEIVER	sanwa M12
WING	With Body		

BEST LAPTIME 8.353 QUALIF. / FINAL POSITION /

ESC SETTING 0-2-2-3-2-4-3-4-0-0

COMMENTS / IMPRESSIONS

CONTACT