B-MAX4 III SETTING SHEET

Arn0

DRIVER

DATE / /

CIRCUIT

○ INDOOR ○ OUTDOOR

○ WET ○ DRY ○ DUSTY ○ SMOOTH ○ BUMPY ○ OTHER

○ LOW TRACTION ○ MED TRACTION ○ HIGH TRACTION

○ CLAY ○ BLUE GROOVE ○ ASTROTURF ○ GRASS ○ CARPET ○ WOOD

FRONT

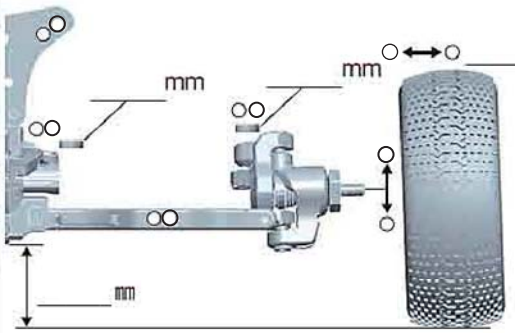

◆TOE-IN (+) / OUT(−) ____ °

Shim

FF FR

○1.0 ○1.1
○1.2 ○1.3
○1.4

○ BALL DIFF
○ GEAR DIFF

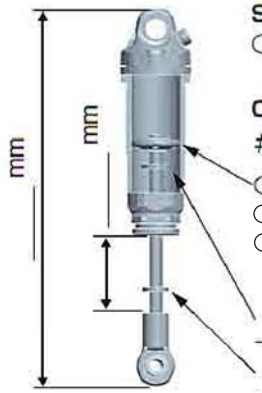

○ X SHOCK
SPRING
○ BLACK

OIL
#
○ #1 ○ #2 ○ #3 ○ #4

mm x
mm x

REAR

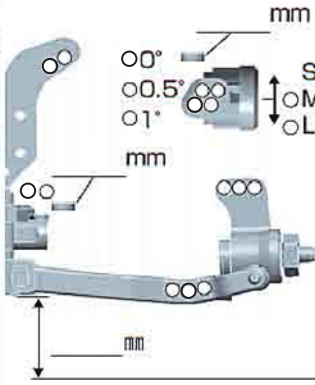

○0°
○0.5°
○1°

S
○M
○L

RF

-0.5° +0.5°

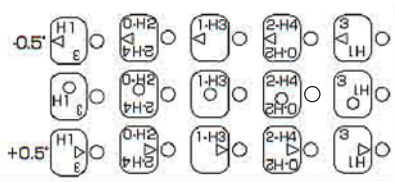

○1.0 ○1.1
○1.2 ○1.3
○1.4 ○1.5
○1.6

○ BALL DIFF
○ GEAR DIFF

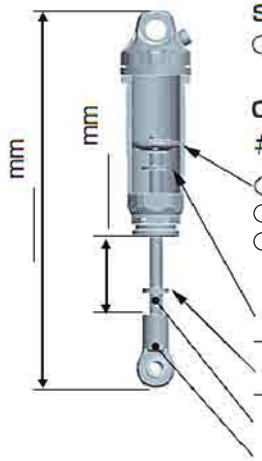

○ X SHOCK
SPRING
○ BLACK

OIL
#
○ #1 ○ #2 ○ #3 #4

mm x
mm x

DRIVE

MOTOR ➪ ○Bonded ○Sintered mm

GEAR ➪ Spur T / Pinion T : 2.35

BATTERY ➪

ESC ○ / / /

○BL-R3.1 ○

Battery placement

TIRE

FRONT

TIRE ➪

INSERTS ➪

WHEELS ➪

REAR

TIRE ➪

INSERTS ➪

WHEELS ➪

OTHER

○ FULL RIP

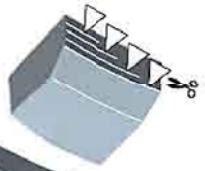

COMMENT