# R10 2013 SET-UP SHEET

*1/10 190mm Electric Touring Car.*

ARC

| | |
|---|---|
| RACE | Reedy Race |
| TRACK | NEC |
| NAME | Malc Hall |
| CITY / COUNTRY | UK |
| DATE | 12th January 2014 |

| TEMPERATURE | AIR | TRACK |
|---|---|---|

| QUALIFYING POSITION | BEST LAPTIME | FINAL POSITION | RACE LENGTH |
|---|---|---|---|
| | 14.30 SEC | | 5 MIN |

TRACK CONDITION: ☑ CARPET ☐ ASPHALT ☑ TECHNICAL ☐ MIXED ☐ FAST

TRACTION: ☐ LOW ☐ MEDIUM ☑ HIGH

## TRANSMISSION

| FRONT | REAR |
|---|---|
| GEAR DIFF | GEAR DIFF |
| ☐ CST | ☐ 2000 Ultimate CST |
| ☐ ONE WAY | Number of Gears |
| ☑ SPOOL | ☐ 2 ☑ 4 |

*filled so the oil was oozing out the screw holes*

| | | | |
|---|---|---|---|
| MOTOR | SP MMM | ESC | HW 3.1 |
| PINION DP | T | SPUR GEAR DP | T |
| FINAL DRIVE RATIO (Internal Ratio: 2.0) | 7.45 | | |

| FRONT | | | REAR |
|---|---|---|---|
| OIL 27.5 CST | ☐ 3 HOLES ☑ 4 HOLES | SHOCK PISTON | ☐ 3 HOLES ☐ 4 HOLES | OIL 25 CST |
| SPRING GREEN | | HOLE SIZE: ☑ 1.1 mm ☐ mm | | SPRING BLUE |

| | | |
|---|---|---|
| SOREX 32 | TIRES | SOREX 32 |
| SPOKED 1MM OFF SET | RIM | SPOKED 1MM OFFSET |
| BLUES | INSERTS | BLUE |
| SPIDER GREEN | ADDITIVE | SPIDER GREEN |

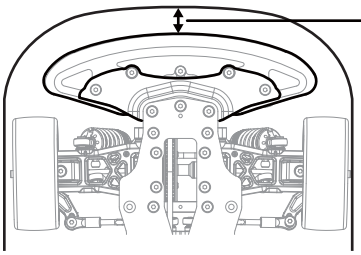

Bumper: ☐ Standard ☑ Cut

BODY MOUNT DISTANCE: mm

| BODY | TSX | WING | TSX |
|---|---|---|---|

## NOTE

*Alteration by Arn0 at PetitRC.com*

*Split rear blocks*
*Locked up steering posts, using the optional stiffner.*
*Used the mount from the flexi motor mount to lock down the top deck.*
*Car was sitting flat with lots of balanced rotation, and nearly all of the rolling at the rear was gone, so may try raising the roll center to 0.7mm on the rear mounts only to hope eliminate entirely. I was extremely happy with the car overall.*
*The rims we used would have made the car 2mm wider overall.*
*Tyre temp 40 degrees*

*I will see how this setup works in blinky at HRCC this coming Friday.*

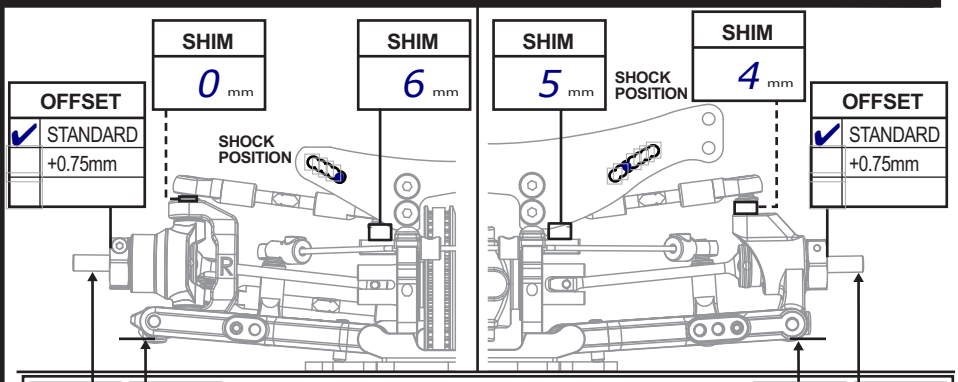


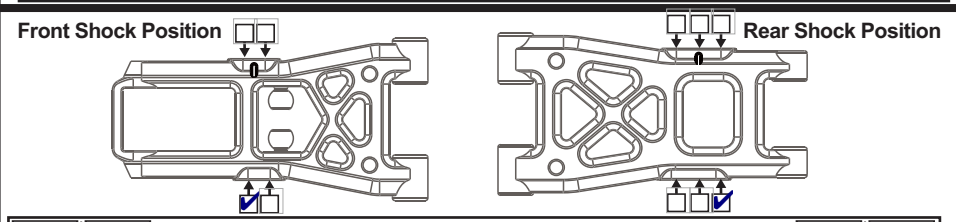


| ° | 1.5 ° | CAMBER | 2 ° | ° |
|---|---|---|---|---|

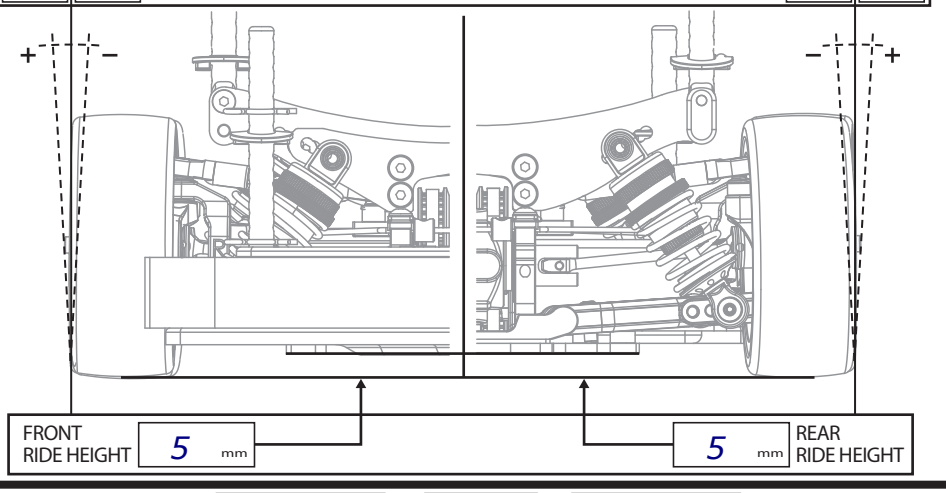


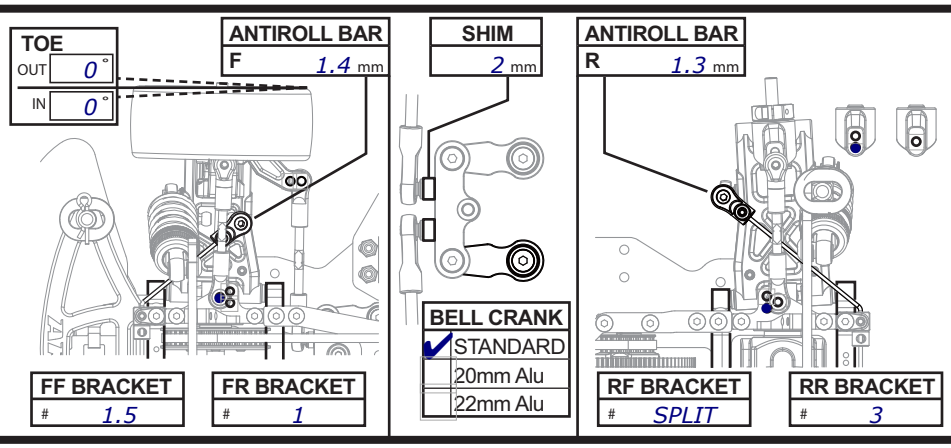


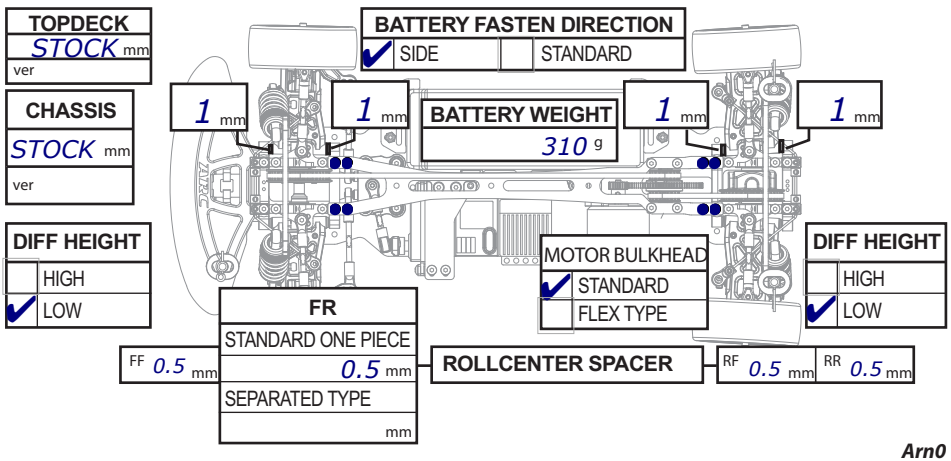


*Arn0*