A10-25 SET-UP SHEET
1/10 Electric Touring Car

ARC ver 2025.02

RACE	LIGUE REGION
TRACK	
NAME	WIDY
CITY / COUNTRY	FRANCE
DATE	16/03/2025

TEMPERATURE	AIR	TRACK
	17	

QUALIFYING POSITION	BEST LAPTIME	FINAL POSITION	RACE LENGTH
	SEC	4	MIN

TRACK CONDITION: ☐ CARPET ☑ ASPHALT ☐ TECHNICAL ☐ MIXED ☐ FAST

TRACTION: ☐ LOW ☑ MEDIUM ☐ HIGH

FRONT

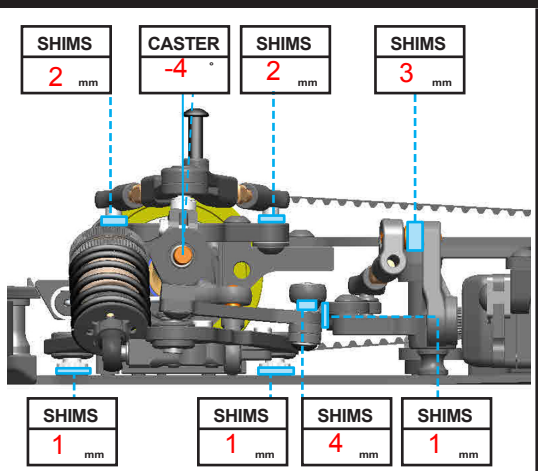

REAR

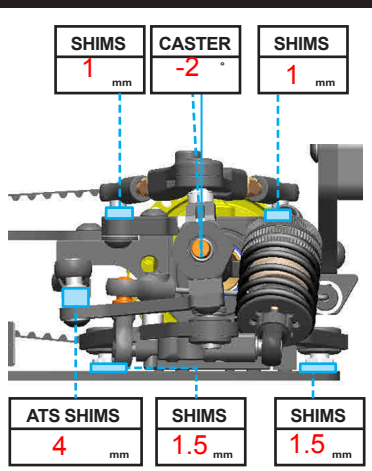

TRANSMISSION

BELT		
FRONT	☐ STD	☑ SOFT
REAR	☐ STD	☑ SOFT

GEAR DIFF OIL: ☐ 5K CST

NUMBER OF GEARS: ☐ 2 ☐ 4

PINION	50 T	SPUR GEAR	94 T
FINAL DRIVE RATIO			

SPRING

☑ 17mm ☐ 20mm

SUSPENSION

FRONT		REAR
350 W CST	OIL	350 W CST
☐ PDS	PDS	☐ PDS
C2.5-C2.8	SPRING	C2.8
1.1 mm	HOLES / DIAMEER	1.1 mm
0 %	REBOUND	0 %

FRONT

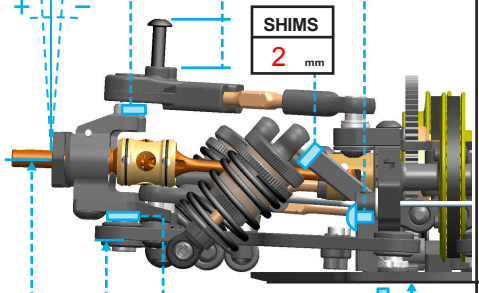

CAMBER	SHIMS	HEIGHT	
° 2 °	1 mm	mm	☑ FIX ☐ REMOVE

SHIMS 2 mm

SHIMS 1 mm

mm 4.4 mm DOWNSTOP	☑ FIX ☐ REMOVE	5 mm RIDE HEIGHT

REAR

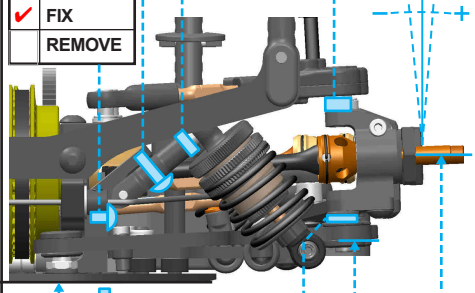

☑ FIX ☐ REMOVE	SHIMS 2 mm	SHIMS 2 mm	CAMBER 2 ° °

☑ FIX ☐ REMOVE

SHIMS 1 mm

5.1 mm RIDE HEIGHT	☑ FIX ☐ REMOVE	5.5 mm mm DOWNSTOP

ANTI-ROLL BAR

FRONT 1.1 mm REAR 1.1 mm

Rush 36X	TIRES	Rush 36X
20mm	ADDITIVE TIMING	20mm
V3	ADDITIVE	V3

TREATED AREA: FL FR RL RR

BODY MOUNT DISTANCE: 10 mm

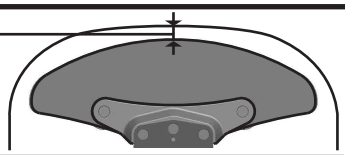

BODY | WING

NOTE

CHASSIS SETUP

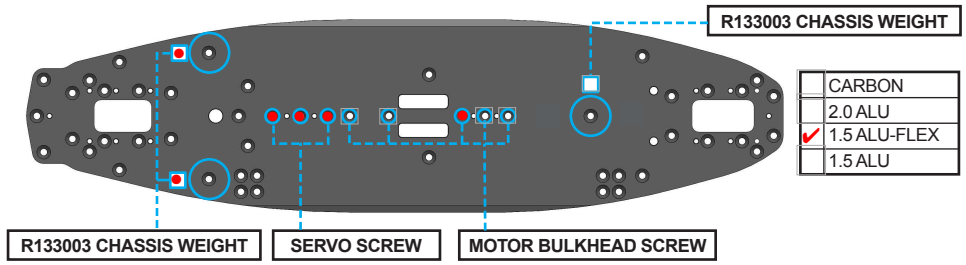
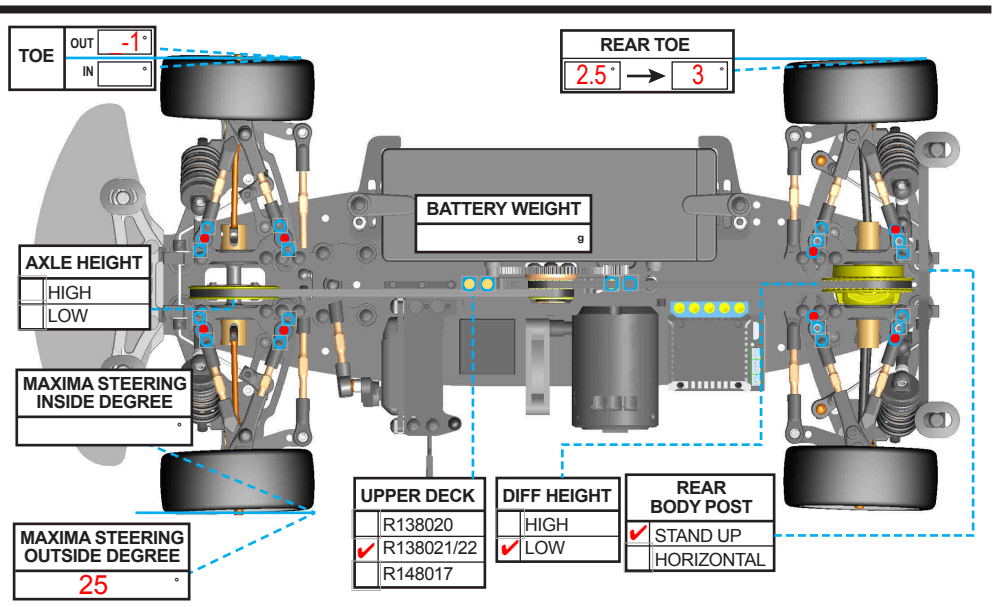
- ☐ CARBON
- ☐ 2.0 ALU
- ☑ 1.5 ALU-FLEX
- ☐ 1.5 ALU