A10-23 SET-UP SHEET
1/10 Electric Touring Car

ARC ver 2023.04

RACE	National Championship - WET
TRACK	Valdres Modellbilklubb
NAME	Albin Ingholm
CITY / COUNTRY	Fagernes, Norway
DATE	19-20/08/2023

TEMPERATURE	AIR	TRACK

QUALIFYING POSITION	BEST LAPTIME	FINAL POSITION	RACE LENGTH
2	SEC	1	5 MIN

TRACK CONDITION: ☐ CARPET ☑ ASPHALT ☑ TECHNICAL ☐ MIXED ☐ FAST

TRACTION: ☑ LOW ☐ MEDIUM ☐ HIGH

TRANSMISSION

BELT: FRONT ☑ STD ☐ SOFT; REAR ☑ STD ☐ SOFT

GEAR DIFF OIL: ☐ 7000 CST

NUMBER OF GEARS: ☐ 2 ☑ 4

PINION	38 T	SPUR GEAR	99 T
FINAL DRIVE RATIO	4.9		

SPRING

☑ 17mm ☐ 20mm

FRONT		REAR
400 CST	OIL	400 CST
2.4-2.7	SPRING	2.4-2.7
4 / 1.1 mm	HOLES / DIAMEER	4 / 1.1 mm
0 %	REBOUND	0 %

ANTI-ROLL BAR

FRONT 1.3 mm REAR 1.3 mm

Rain	TIRES	Rain
	ADDITIVE TIMING	
	ADDITIVE	

TREATED AREA: FL FR RL RR

BODY MOUNT DISTANCE: 6 mm

BODY	Speciale 0.6	WING	Zooracing

NOTE

Almost no droop

Cut rear topdeck

Hudy oil

FRONT

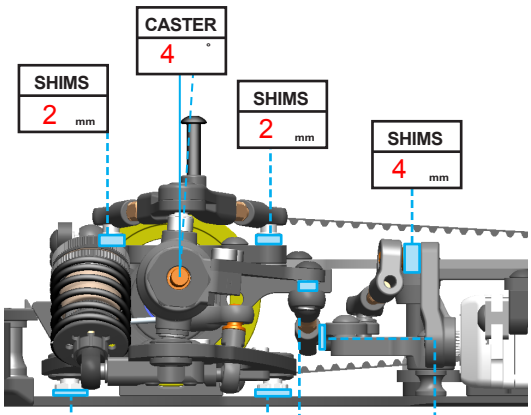

REAR

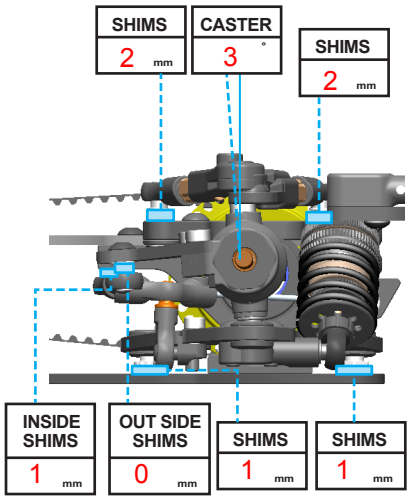

FRONT

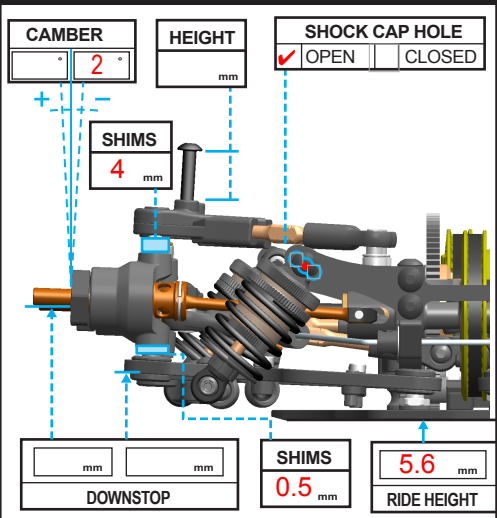

REAR

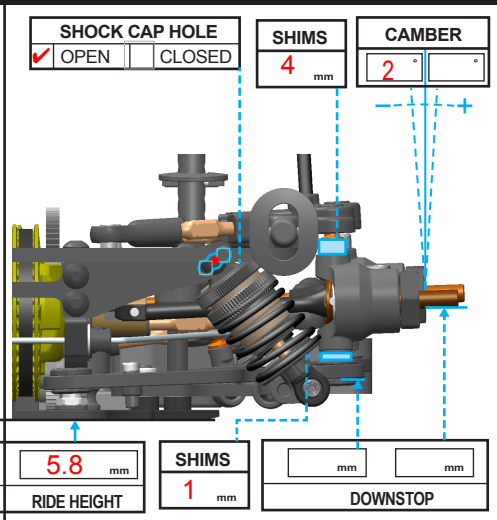

CHASSIS SETUP

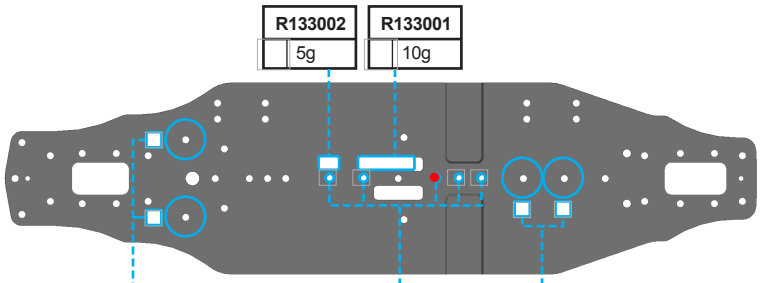
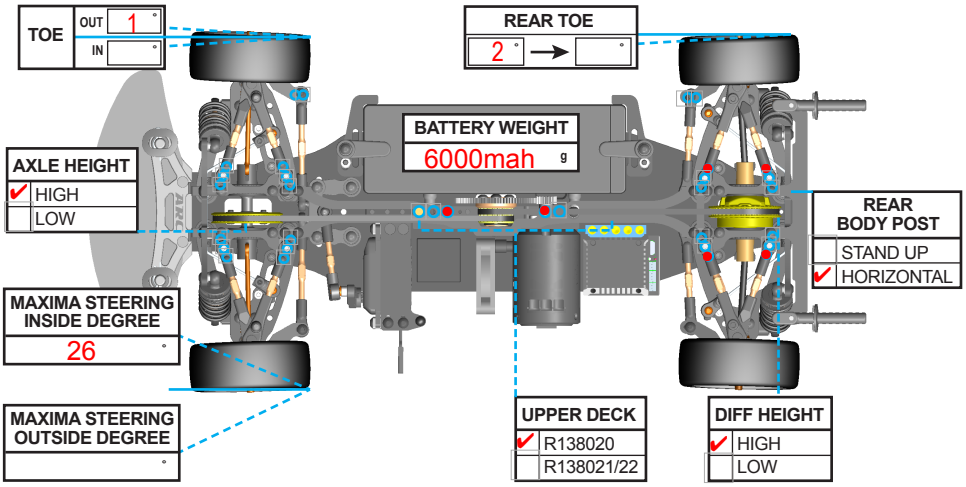
R133003 CHASSIS WEIGHT | MOTOR BULKHEAD SCREW | R133003 CHASSIS WEIGHT