M4 PRO

SETUP SHEET

1/10 SCALE RADIO CONTROL TOURING CAR

DRIVER | DATE

FINAL POSITION | BEST LAPS

CIRCUIT

■ Place (地點)	☐ Indoor (室內)	☐ Outdoor (室外)	
■ Track (場地)	☐ Asphalt (瀝青)	☐ Carpet (地毡)	
■ Traction (抓著力)	☐ High (高)	☐ Medium (中)	☐ Low (低)
■ Track Condition (場地狀況)	☐ Flat (平坦)	☐ Bumpy (顛簸)	

FRONT

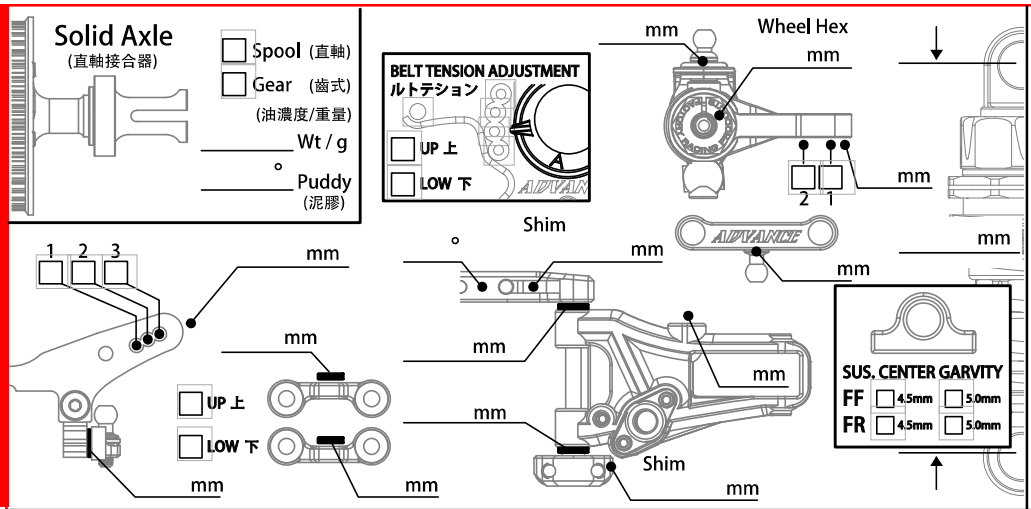

shock absorber 減震器

Oil (油濃度) #

Piston (活塞) 2 3 4 Holes mm

Spring (彈簧)

Bladder Foam (油壓頂部海綿) Yes ☐ No ☐

Rebound (彈芯) %

Notes (備註)

Ride Height (離地距) mm

Camber Angle (外傾角) °

Sway Bar (防傾桿) mm

Droop (油壓行程) mm

Downstop (擺臂止限位) mm

Toe Angle (束角) °

REAR

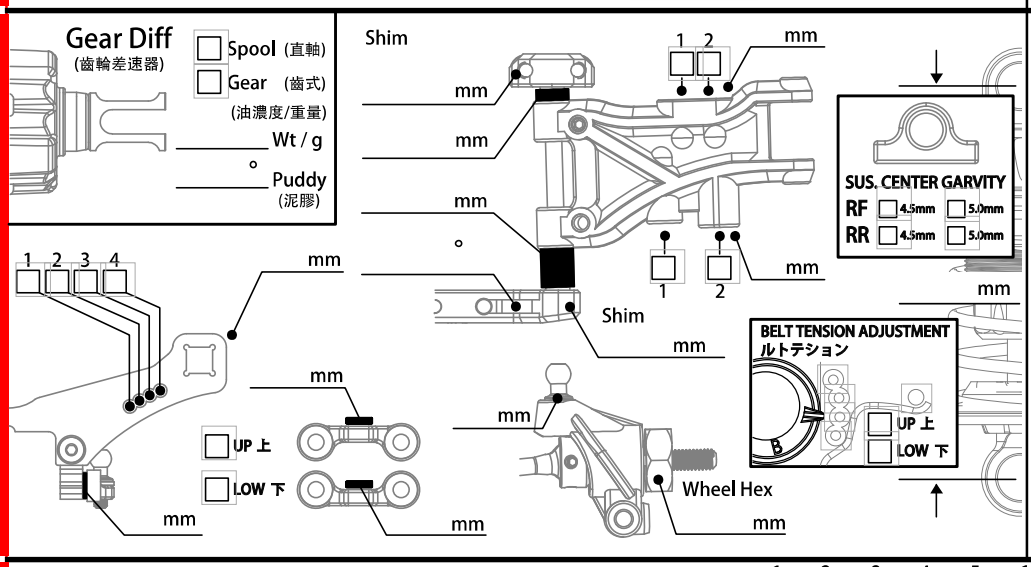

shock absorber 減震器

Oil (油濃度) #

Piston (活塞) 2 3 4 Holes mm

Spring (彈簧)

Bladder Foam (油壓頂部海綿) Yes ☐ No ☐

Rebound (彈芯) %

Notes (備註)

Ride Height (離地距) mm

Camber Angle (外傾角) °

Sway Bar (防傾桿) mm

Droop (油壓行程) mm

Downstop (擺臂止限位) mm

Toe Angle (束角) °

OTHER

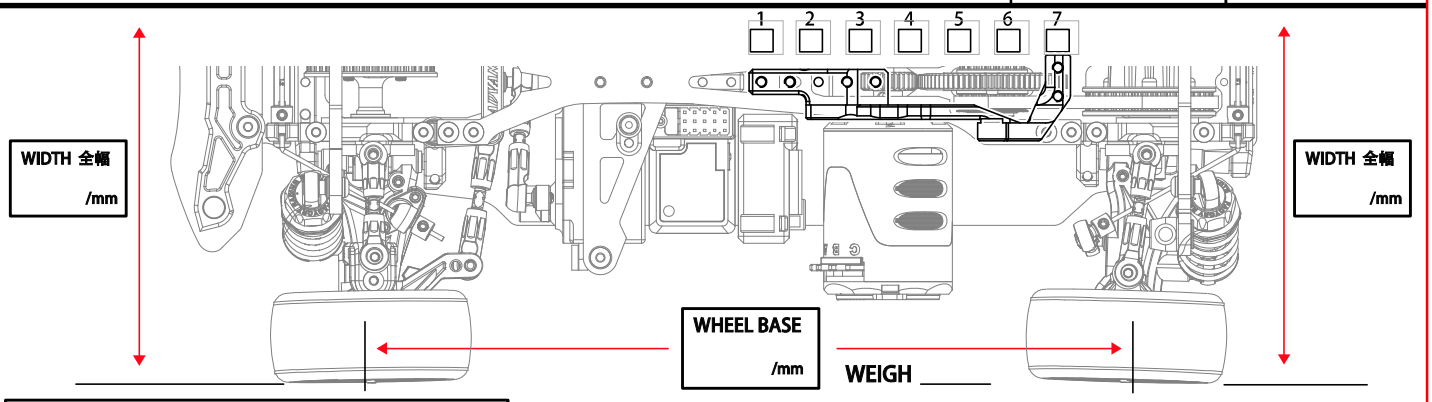

FRONT	/	REAR
Tire (胎皮)	/	
Compound (胎皮值)	/	
Insert (胎胆)	/	
Wheel (輪圈)	/	
Tire Treatment (胎水)	/	

Spur Gear	T	Pinion Gear	T
Motor		Battery	
ESC		Servo	
Body		Wing	
Final Drive Ratio			

NOTES

Arn0 - PetitRC