ADVANCE EVO 2K18

1/10 SCALE RADIO CONTROL TOURING CAR

SETUP SHEET

DRIVER | DATE

FINAL POSITION (決賽成績) | BEST LAPS (最佳圈數)

CIRCUIT (賽道)

- ■ Place (地點) ☐ Indoor (室內) ☐ Outdoor (室外)
- ■ Track (場地) ☐ Asphalt (瀝青) ☐ Carpet (地毡)
- ■ Traction (抓著力) ☐ High (高) ☐ Medium (中) ☐ Low (低)
- ■ Track Condition (場地狀況) ☐ Flat (平坦) ☐ Bumpy (顛簸)

FRONT

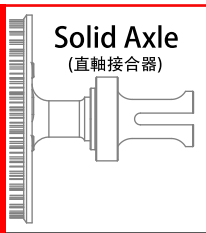

Solid Axle (直軸接合器)

☐ Spool (直軸)
☐ Gear (齒式)
(油濃度/重量)
Wt / g
°
Puddy (泥膠)

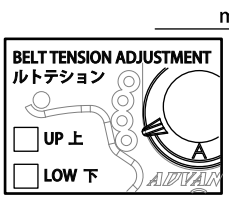

BELT TENSION ADJUSTMENT ルトテション
☐ UP 上
☐ LOW 下

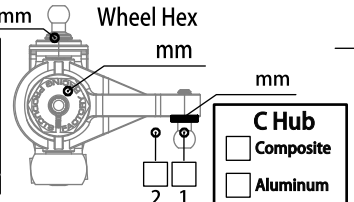

Wheel Hex
mm
mm
mm
C Hub
☐ Composite
☐ Aluminum
2 1

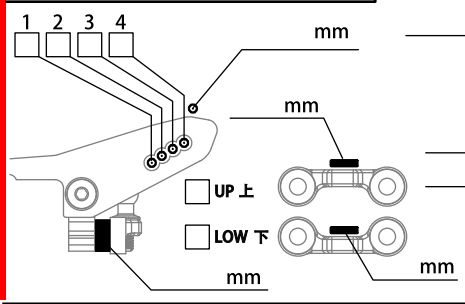

1 2 3 4
mm
mm
☐ UP 上
☐ LOW 下
mm
mm

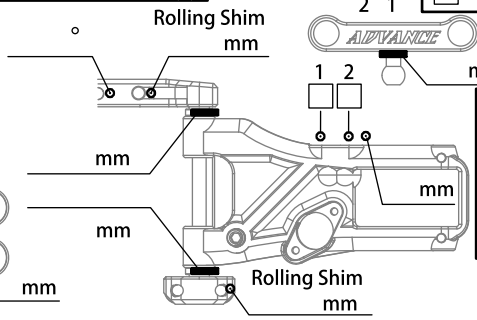

Rolling Shim
mm
mm
mm
1 2
mm
mm
Rolling Shim
mm

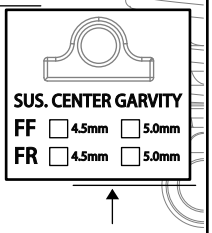

SUS. CENTER GARVITY
FF ☐ 4.5mm ☐ 5.0mm
FR ☐ 4.5mm ☐ 5.0mm

shock absorber 減震器

Oil (油濃度)
#
Piston (活塞)
2 3 4 Holes
mm
Spring (彈簧)
Bladder Foam (油壓頂部海綿)
Yes ☐ No ☐
Rebound (彈芯)
%
Notes (備註)

Ride Height (離地距)
mm
Camber Angle (外傾角)
°
Sway Bar (防傾桿)
mm
Droop (油壓行程)
mm
Downstop (擺臂止限位)
mm
Toe Angle (束角)
°

REAR

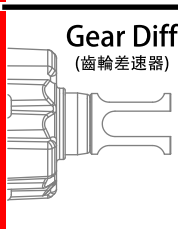

Gear Diff (齒輪差速器)

☐ Spool (直軸)
☐ Gear (齒式)
(油濃度/重量)
Wt / g
°
Puddy (泥膠)

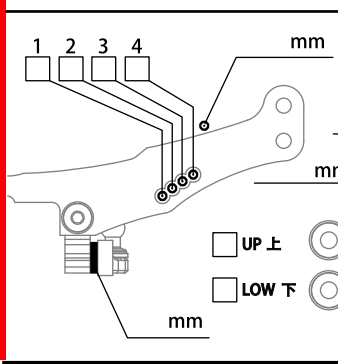

1 2 3 4
mm
mm
☐ UP 上
☐ LOW 下
mm
mm

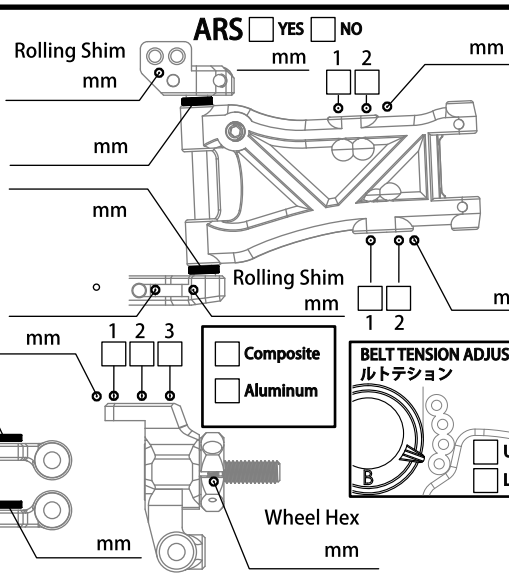

ARS ☐ YES ☐ NO
Rolling Shim
mm
mm
mm
1 2
mm
mm
Rolling Shim
mm
1 2
mm
mm
1 2 3
mm
Wheel Hex
mm

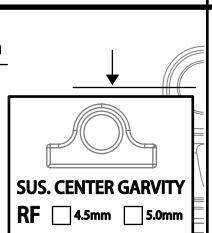

SUS. CENTER GARVITY
RF ☐ 4.5mm ☐ 5.0mm
RR ☐ 4.5mm ☐ 5.0mm

☐ Composite
☐ Aluminum

BELT TENSION ADJUSTMENT ルトテション
☐ UP 上
☐ LOW 下

shock absorber 減震器

Oil (油濃度)
#
Piston (活塞)
2 3 4 Holes
mm
Spring (彈簧)
Bladder Foam (油壓頂部海綿)
Yes ☐ No ☐
Rebound (彈芯)
%
Notes (備註)

Ride Height (離地距)
mm
Camber Angle (外傾角)
°
Sway Bar (防傾桿)
mm
Droop (油壓行程)
mm
Downstop (擺臂止限位)
mm
Toe Angle (束角)
°

OTHER

WIDTH 全幅 /mm

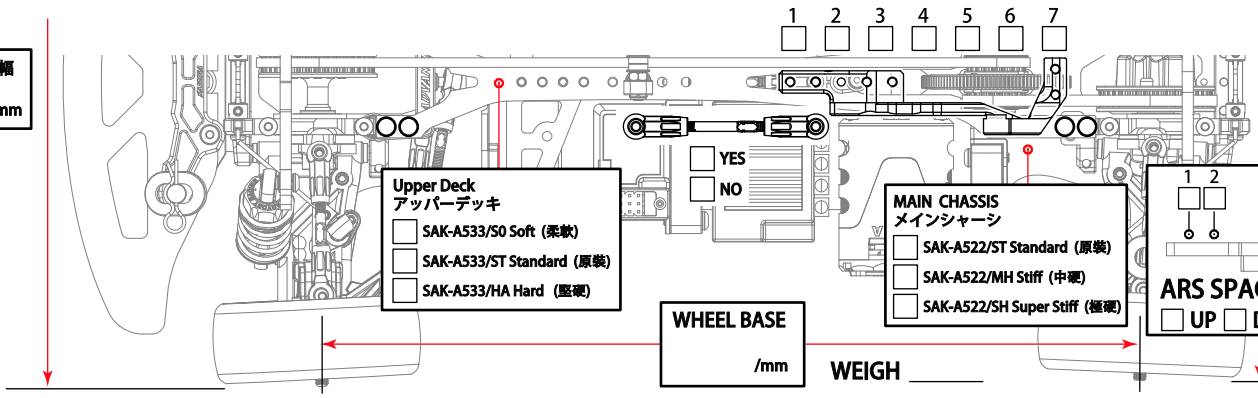

1 2 3 4 5 6 7
YES
NO
Upper Deck アッパーデッキ
☐ SAK-A533/S0 Soft (柔軟)
☐ SAK-A533/ST Standard (原裝)
☐ SAK-A533/HA Hard (堅硬)
MAIN CHASSIS メインシャーシ
☐ SAK-A522/ST Standard (原裝)
☐ SAK-A522/MH Stiff (中硬)
☐ SAK-A522/SH Super Stiff (極硬)
1 2
ARS SPACER mm
☐ UP ☐ DOWN

WIDTH 全幅 /mm

WHEEL BASE /mm

WEIGH

FRONT (前方)	REAR (後方)
Tire (胎皮)	
Compound (胎皮值)	
Insert (胎胆)	
Wheel (輪圈)	
Tire Treatment (胎水)	

Spur Gear (大減齒)	T	Pinion Gear (摩打齒)	T
Motor (馬達)		Battery (電池)	
ESC (電調)		Servo (伺服器)	
Body (車殼)		Wing (風翼)	
Final Drive Ratio (齒比)	(Spur / Pinion x *1.9*) : 1 ( ) : 1		

Am0 - PetitRC

COMMENTS