ADVANCE EVO 2018

1/10 SCALE RADIO CONTROL TOURING CAR

SETTING SHEET

DRIVER (賽員): REX CHAN

DATE: 04 / 03 / 18

FINAL POSITION (決賽成績): TQ & A1 BEST LAPS (最佳圈數): 17.987

CIRCUIT (賽道): RC ADDICT (TITC 2018)

Place (地點)	☐ Indoor (室內)	☑ Outdoor (室外)	
Track (場地)	☑ Asphalt (瀝青)	☐ Carpet (地毯)	
Traction (抓著力)	☑ High (高)	☐ Medium (中)	☐ Low (低)
Track Condition (場地狀況)	☐ Flat (平坦)	☑ Bumpy (顛簸)	

FRONT (前方)

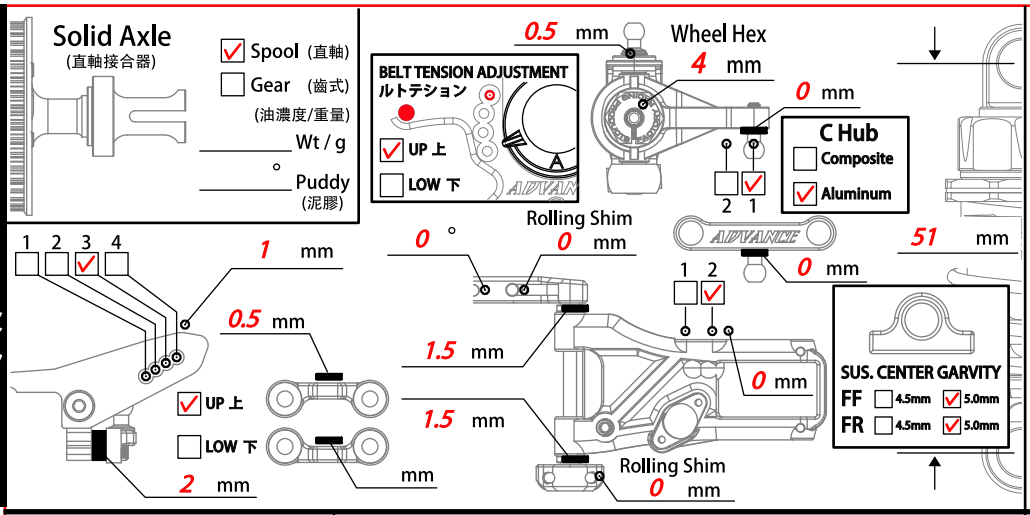

shock absorber 減震器

Oil (油濃度) #	450
Piston (活塞) 2 3 4 Holes	1.1 mm
Spring (彈簧)	RP 2.6 ~ 2.8
Bladder Foam (油壓頂部海綿)	Yes ☐ No ☑
Rebound (彈芯)	0 %
Notes (備註)	TRAVEL 9mm

Ride Height (離地距)	5.2 mm
Camber Angle (外傾角)	2.5 °
Sway Bar (防傾桿)	1.3 mm
Droop (油壓行程)	3.8 mm
Downstop (擺臂止限位)	5 mm
Toe Angle (束角)	-1 °

REAR (後方)

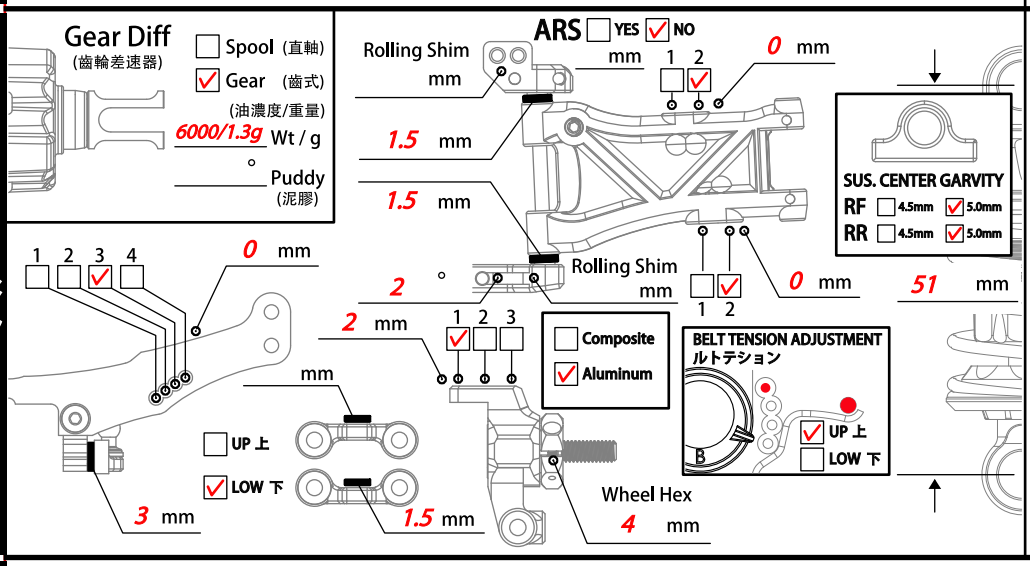

shock absorber 減震器

Oil (油濃度) #	450
Piston (活塞) 2 3 4 Holes	1.1 mm
Spring (彈簧)	RP 2.8
Bladder Foam (油壓頂部海綿)	Yes ☐ No ☑
Rebound (彈芯)	0 %
Notes (備註)	TRAVEL 9mm

Ride Height (離地距)	5.6 mm
Camber Angle (外傾角)	2.5 °
Sway Bar (防傾桿)	1.2 mm
Droop (油壓行程)	4.8 mm
Downstop (擺臂止限位)	4 mm
Toe Angle (束角)	2 °

OTHER (其他)

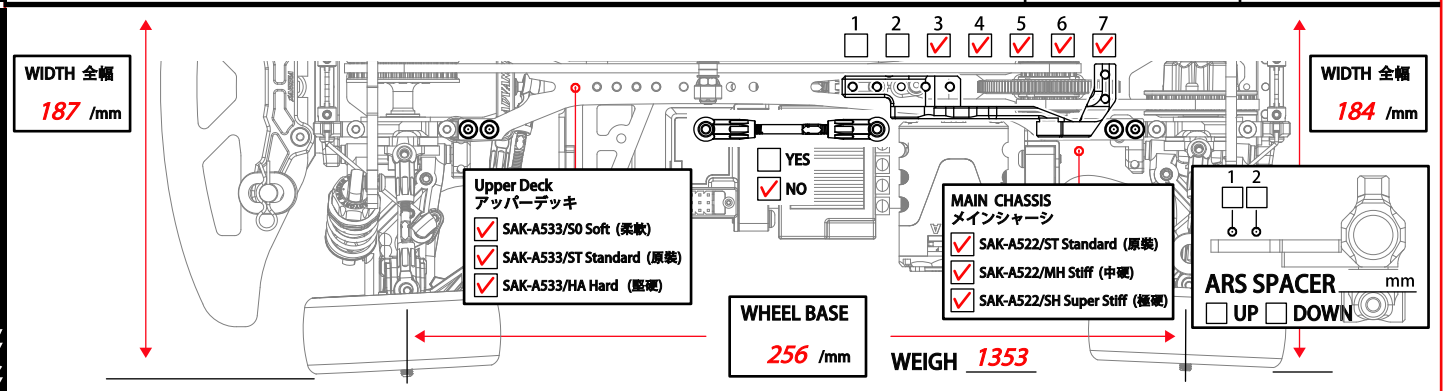

	FRONT (前方)	REAR (後方)
Tire (胎皮)	RE36 #26021	RE36 #26021
Compound (胎皮值)	———	———
Insert (胎胆)	Origin (原裝)	Origin (原裝)
Wheel (輪圈)	Origin (原裝)	Origin (原裝)
Tire Treatment (胎水)	MG3	MG3

Spur Gear (大減齒)	87 T 64p	Pinion Gear (摩打齒)	55 T
Motor (馬達)	HW G3 17.5	Battery (電池)	Scorpion 6000
ESC (電調)	ORCA VRITRA B32	Servo (伺服器)	Sanwa PGS-CL
Body (車殼)	BRZ GT	Wing (風翼)	ORIGIN
Final Drive Ratio (齒比)	(Spur / Pinion x 1.9) : 1 (3.0) : 1		