YZ-4 SF SETTING SHEET Ver.01

DRIVER *Randy Pike*

DATE *4.16.18*

CIRCUIT *IRCR Raceway*

●INDOOR ○OUTDOOR
●DIRT ○ASTROTURF ○CARPET ○GRASS ○WOOD
○WET ●DRY ○DUSTY ●SMOOTH ○BUMPY
●HARD PACKED ●CLAY ○BLUE GROOVE ○ _____
○LOW TRACTION ○MED TRACTION ●HIGH TRACTION

FRONT

◆CAMBER ●↔○ *-1* °

◆TOE ○IN ●OUT *-1* °

◆RIDE HEIGHT *19* mm

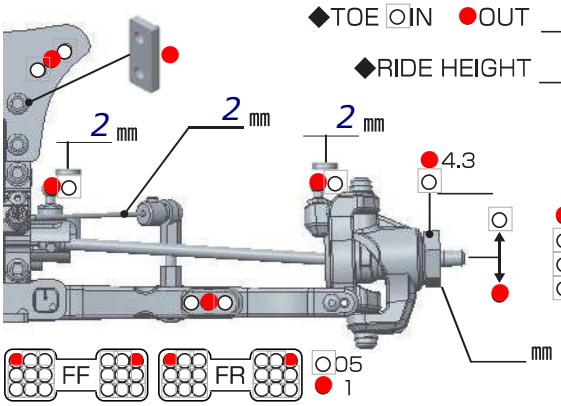

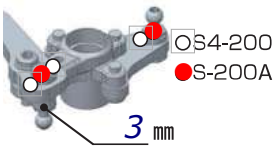

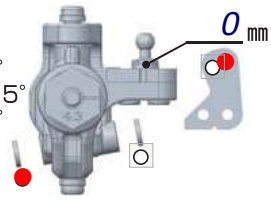

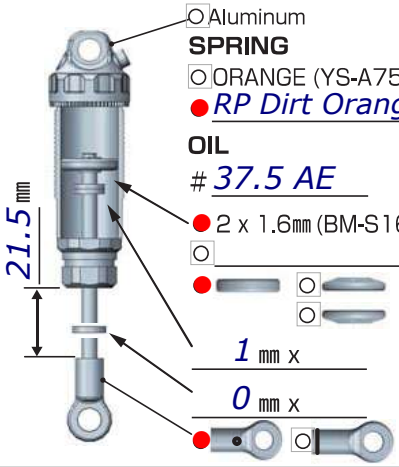

REAR

◆CAMBER ●↔○ *-1* °

◆RIDE HEIGHT *20* mm

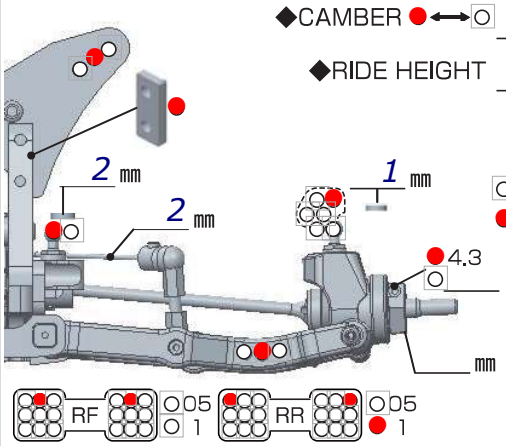

●S4-008RL5
○ _____

○Z2-415R
●Z2-415R00 (Aluminum)

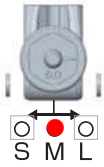

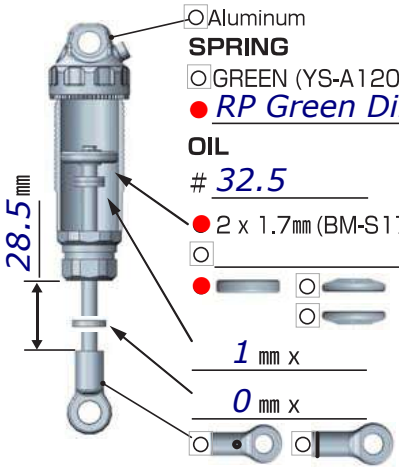

DRIVE

F/# *7,000cst*
4 grs
R/# *7,000cst*
4 grs

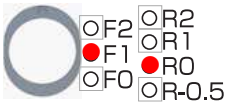

_____

MOTOR ➪ *Tekin Spec R* Rotor *12.5* mm

GEAR ➪ Spur *75*T / Pinion *22* T : ● 2.5 / ○ 2.35

BATTERY ➪ *ProTek 100c 4900*

ESC ○ YOKOMO RPX ○YOKOMO BL-PRO4

● *Tekin RS Pro BE*

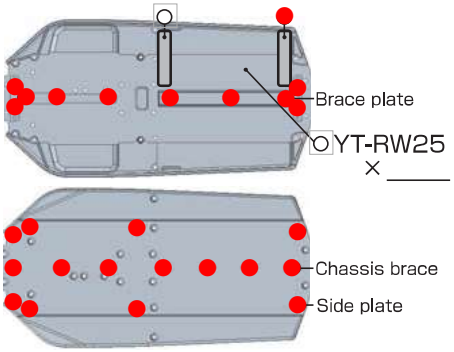

TIRE

FRONT		REAR	
TIRE	➪ *JConcepts Gold Dirt Webs*	TIRE	➪ *JConcepts Gold Dirt Webs*
INSERTS	➪ *Dirt Tech*	INSERTS	➪ *Dirt Tech*
WHEELS	➪ *Yokomo*	WHEELS	➪ *Yokomo*

OTHER

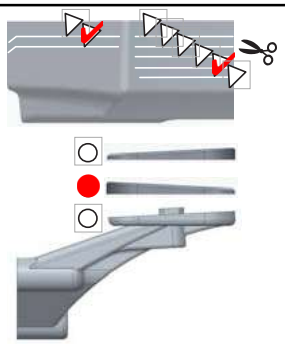

○ _____

YOKS4-010FW 73mm Front Double Joint Universal Driveshaft
YOKBD-500GA Aluminum Gear Diff Shafts
YOKB8-503GP Differential Plastic Bevel Gear Set
FTC073 Yz4-SF Slipper Lockout w/75T Avid Spur
FTC070 Yz4-SF Battery Strap
FTC071 Yz4-SF Front Shock Tower
FTC072 Yz4-SF Rear Shock Tower

PetitRC.com ArnO
COMMENT