YZ-4 SF SETTING SHEET Ver.01

DRIVER: Antoni Caretti

DATE: 9-10 June

CIRCUIT: Mildura Mallee Madness

○INDOOR ●OUTDOOR
●DIRT ○ASTROTURF ○CARPET ○GRASS ○WOOD
●WET ○DRY ○DUSTY ○SMOOTH ●BUMPY
○HARD PACKED ●CLAY ○BLUE GROOVE ○
●LOW TRACTION ○MED TRACTION ○HIGH TRACTION

FRONT

◆CAMBER ●↔○ 1°
◆TOE ○IN ●OUT 2°
◆RIDE HEIGHT 21 mm

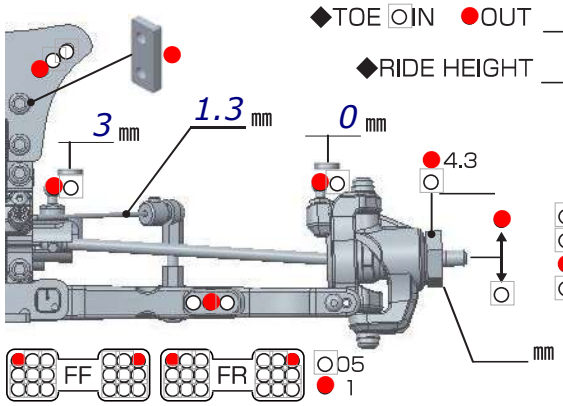

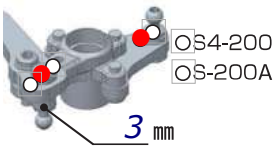

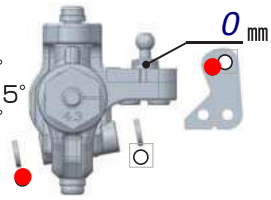

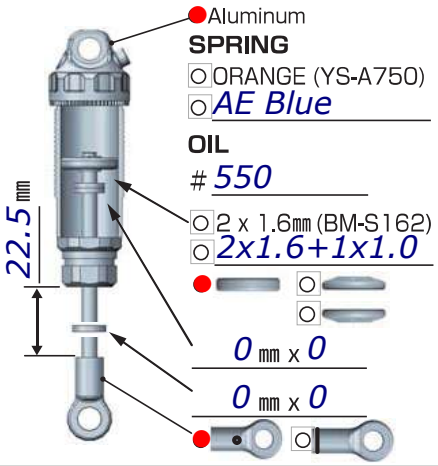

REAR

◆CAMBER ●↔○ 1.5°
◆RIDE HEIGHT 21 mm

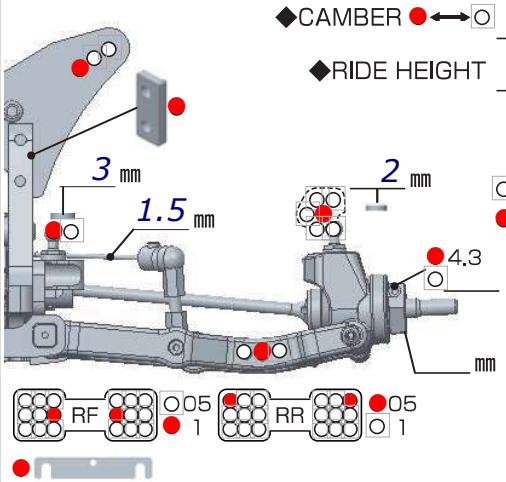

●S4-008RL5
○

○Z2-415R
●Z2-415R00 (Aluminum)

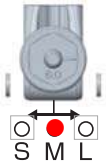

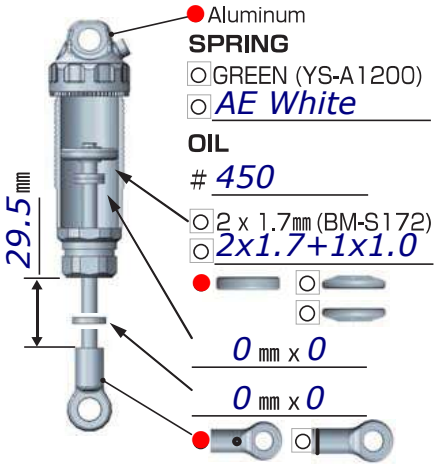

DRIVE

F/# 5000 grs
R/# 5000 grs

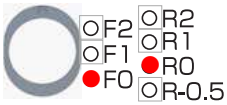

200,000

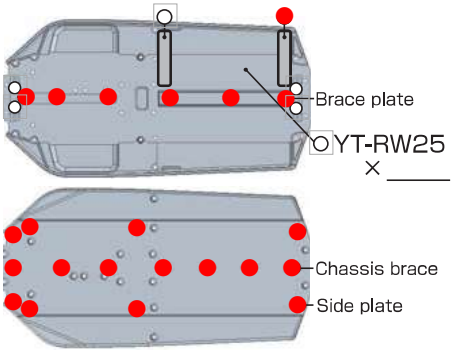

MOTOR ➪ RP 6.5T Rotor 12.5 mm
GEAR ➪ Spur 87T / Pinion 21 T : ○2.5 / ○2.35
BATTERY ➪
ESC ○YOKOMO RPX ●YOKOMO BL-PRO4
○

TIRE

FRONT		REAR	
TIRE	Sweep Tendroid Silver	TIRE	Rebar Super Soft
INSERTS	Sweep	INSERTS	Foam
WHEELS	Yokomo	WHEELS	Yokomo

OTHER

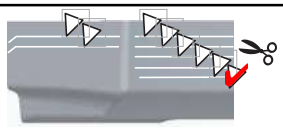

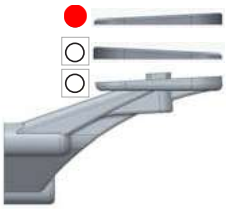

○

COMMENT

ArnO PetitRC.com