YZ-4 SF SETTING SHEET Ver.01

DRIVER: Alfredo Morales

DATE: 12/30/2017

CIRCUIT: Beachline Raceway

●INDOOR ○OUTDOOR
○DIRT ●ASTROTURF ○CARPET ○GRASS ○WOOD
○WET ○DRY ○DUSTY ○SMOOTH ●BUMPY
○HARD PACKED ○CLAY ○BLUE GROOVE ○
○LOW TRACTION ○MED TRACTION ●HIGH TRACTION

FRONT

◆CAMBER ●↔○ 1.5°
◆TOE ○IN ●OUT 1°
◆RIDE HEIGHT 15 mm

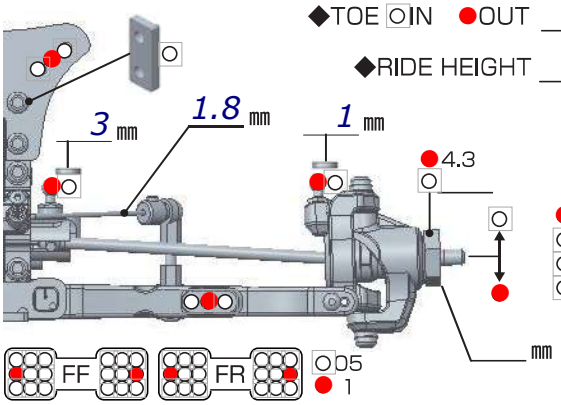

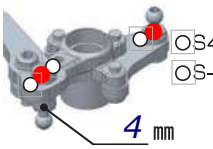

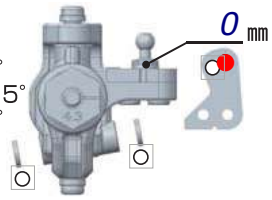

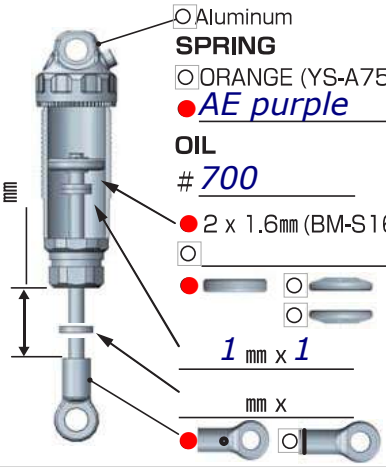

REAR

◆CAMBER ●↔○ 2°
◆RIDE HEIGHT 16 mm

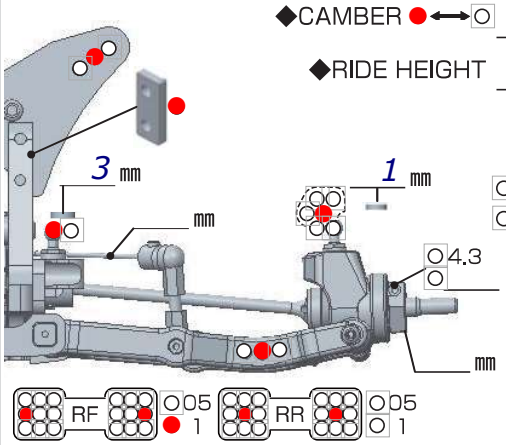

2 mm
mm
●S4-008RL5
○

○Z2-415R
○Z2-415R00 (Aluminum)

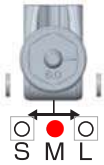

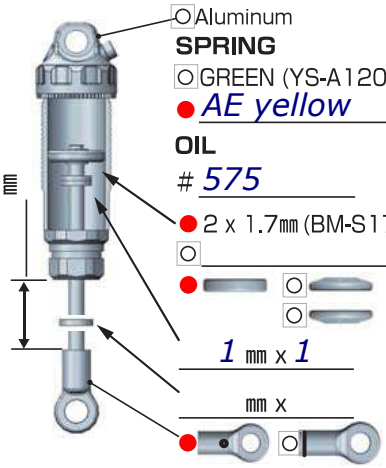

DRIVE

F/# 20k
4 grs
R/# 15k
4 grs

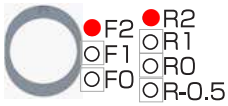

#

MOTOR ➪ Trinity Monster Max 6.5 Rotor 13 mm
GEAR ➪ Spur 84 T / Pinion 21 T : 2.6
BATTERY ➪ Trinity Turf Tuff 5000mah
ESC ○YOKOMO RPX ○YOKOMO BL-PRO4
○HW xr10 rpo

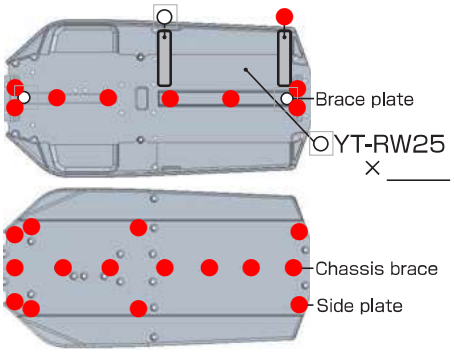

TIRE

FRONT		REAR	
TIRE	➪ Jconcepts Swagger	TIRE	➪ Jconcepts Lockness
INSERTS	➪ grey dirt tech closed	INSERTS	➪ open
WHEELS	➪ JC	WHEELS	➪ JC

OTHER

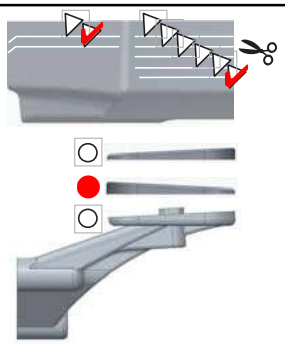

○

COMMENT

First time running the car. Qualified 4th and finished 2nd. Fastest car in qualifying and main. 20.05 hot lap. multiple 19.8 in practice. I tried the RP springs, but the car felt too soft. Track is very high traction. Will add some steering next outing now that I'm use to the car.

PetitRC.com ArnO