YZ-4 SETTING SHEET Ver.02

DRIVER: Minesh Tailor
DATE: 03Jan2016

CIRCUIT: Batley Indoor

● INDOOR ○ OUTDOOR
○ WET ○ DRY ○ DUSTY ● SMOOTH ○ BUMPY
● LOW TRACTION ○ MED TRACTION ○ HIGH TRACTION
○ CLAY ○ GRASS ○ BLUE GROOVE ○ ASTROTURF ○ DIRT
○ CARPET ○ WOOD ● OTHER: Gym Floor with carpet sections

FRONT

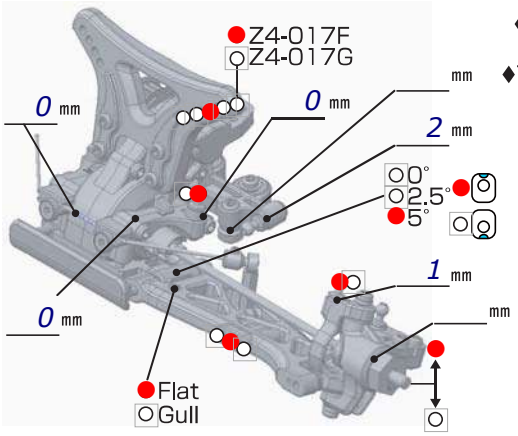

♦CAMBER ●←→○ 2 °
♦TOE ● IN ○ OUT 0 °
♦RIDE HEIGHT 20 mm

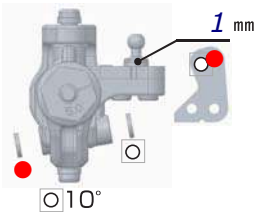

○ 10°
○ 12.5°
○ 15°
○ Z4-201CL
○ Z2-201BA

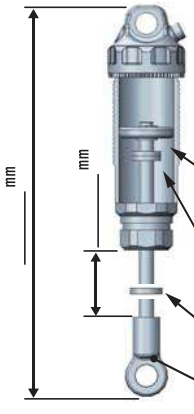

SPRING
○ GREEN (YS-A775)
● Yatabe Black
PRELOAD
OIL 35wt
○ #1 ○ #2 ○ #3
● 1.6mm x 2
● ○ ○
0 mm x
0 mm x
○ SD-008RC

REAR

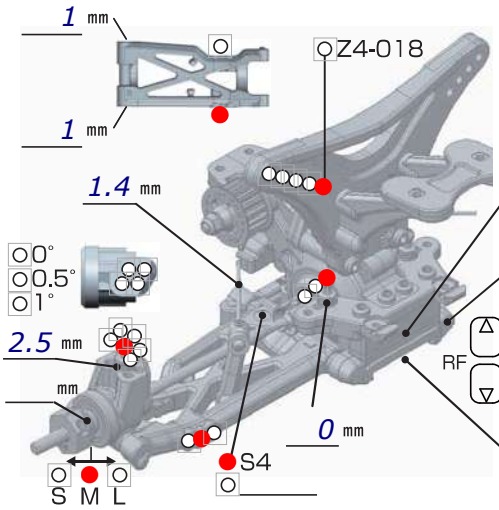

♦CAMBER ●←→○ 2 °
♦RIDE HEIGHT 20 mm

BLACK × 1
BROWN × 1

○ S▲/S-T3-S2
● Z2-300RF/Z4-300SRR

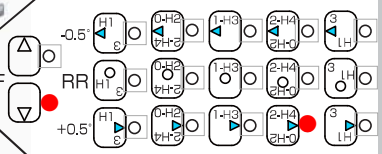

BLACK ×
BROWN ×

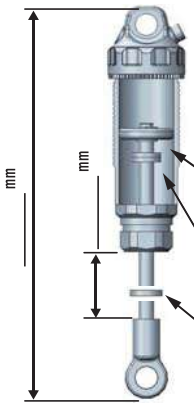

SPRING
○ GREEN (YS-A1200)
● Yatabe Green
PRELOAD
OIL 30wt
○ #1 ○ #2 ○ #3
● 1.6mm x 2
● ○ ○
mm x
mm x

DRIVE

F/# 10K
R/# 5K

F
R

MOTOR ⇨ ○ Bonded ○ Sintered mm
GEAR ⇨ Spur T / Pinion T : 2.6
BATTERY ⇨
ESC ⇨ Racing Performer X Series
⇨

Battery placement

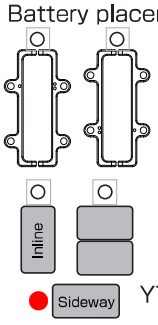

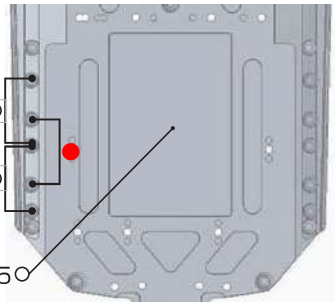

YT-RW25 ○

TIRE

FRONT		REAR	
TIRE	Schumacher Minipin (4wd)	TIRE	Schumacher Minipin 2
INSERTS	Shumacher Blue Medium	INSERTS	Shumacher Blue Medium
WHEELS	Yokomo	WHEELS	Yokomo

OTHER

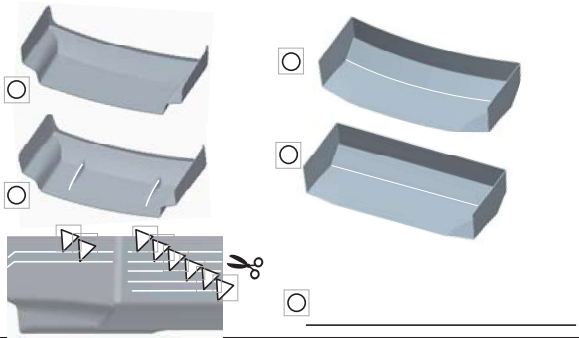

○ ○ ○ ○ ○

COMMENT

Editable by Arn0 at Petitrc.com

Top Deck modified for more flex

Thin rear belt with alu pulleys

car felt faster but looser with +2.5 caster inserts. Car easier and more consistent with +5.

YZ2 Steel RR hanger with thin metal shim underneath (like on YZ2). 1x plastic spacer on top

Unwind shock bottoms if more droop required

Arn0