YZ-2T SETTING SHEET Ver.01

CIRCUIT Stock Nationals 8 at OC/RC Raceway

●INDOOR ○OUTDOOR
●DIRT ○ASTROTURF ○CARPET ○GLASS ○WOOD
○WET ○DRY ●DUSTY ○SMOOTH ○BUMPY
○HARD PACKED ●CLAY ○BLUE GROOVE ○ ____
○LOW TRACTION ○MED TRACTION ●HIGH TRACTION

DRIVER Matthew Gonzales **DATE** 5/5/19

FRONT

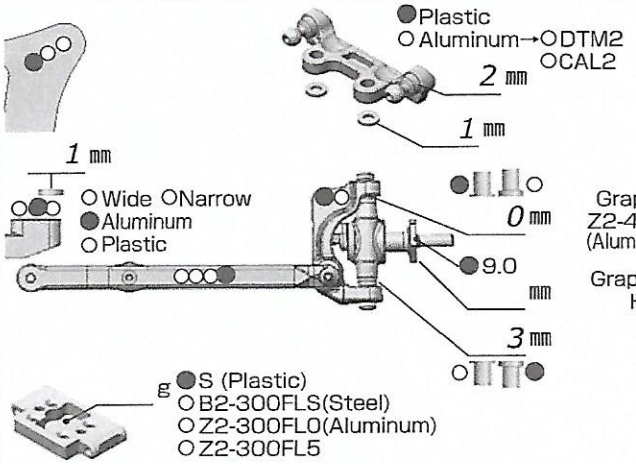

◆CAMBER ●←→○ -2 °

◆TOE ○IN ●OUT 1 °

◆RIDE HEIGHT 27 mm

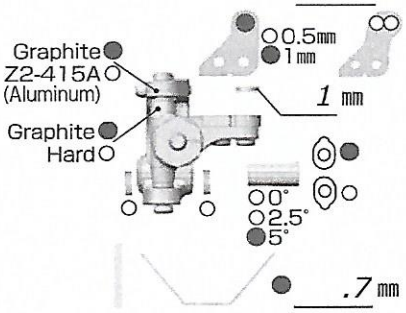

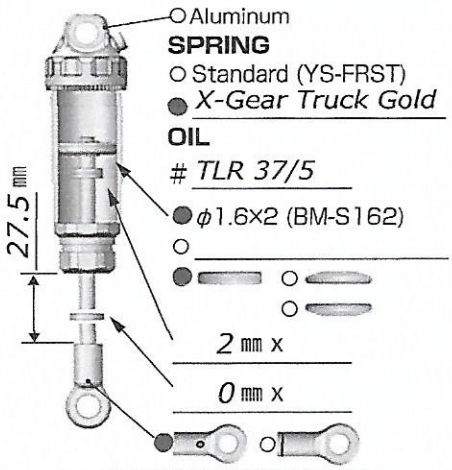

REAR

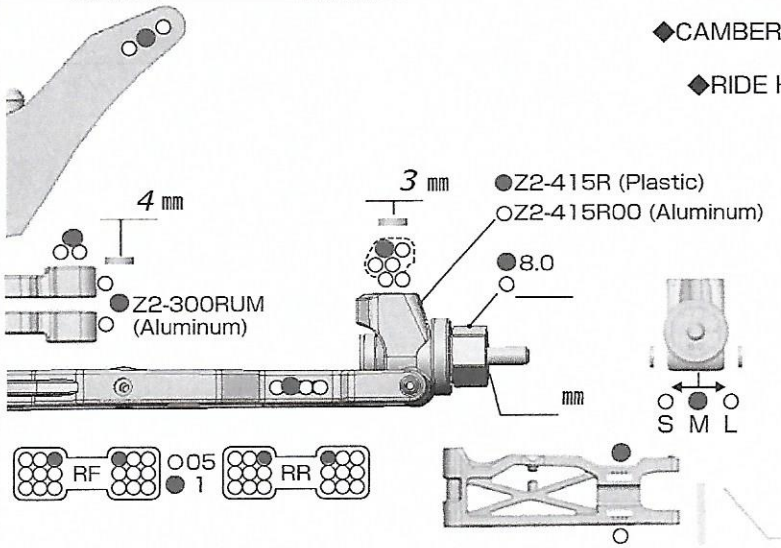

◆CAMBER ●←→○ -2 °

◆RIDE HEIGHT 28 mm

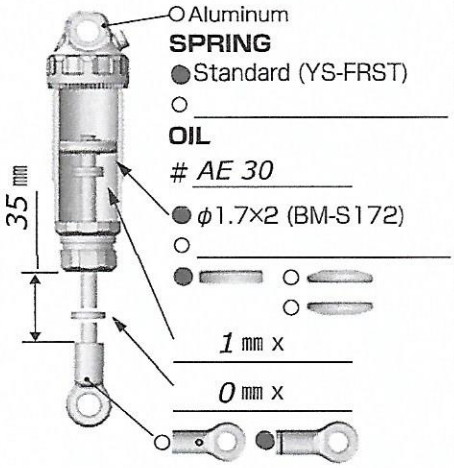

DRIVE

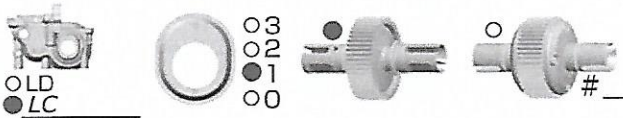

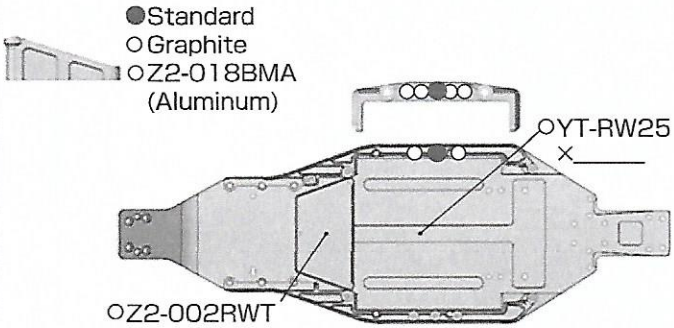

MOTOR	➪ RevTech X-Factor 17.5 Rotor 12.5 mm
GEAR	➪ Spur 28 T / Pinion 78 T : 2.6
BATTERY	➪ Trinity White Carbon HV (4000 for Qualifying, 5000 for main)
ESC	○ YOKOMO BL-PRO4
	● HobbyWing XR10 Pro

TIRE

FRONT		REAR	
TIRE	➪ JConcepts Ellipse (Backwards)	TIRE	➪ JConcepts Ellipse (Backwards)
INSERTS	➪ Dirt Tech	INSERTS	➪ Dirt Tech
WHEELS	➪ JC Mono (Yellow is Fooster)	WHEELS	➪ JC Mono (Yellow is Fooster)

OTHER

●F2 Body (Standard)
○ ____

- Short Plastic Steering Blocks
- RCSS Ti Screws, Ti Turnbuckles
- MOD Puck System