YZ-4 DTM3 CAL3 SETTING SHEET Ver.01

DRIVER **Yusuke Sugiura** | DATE **17/Sep/2019**

CIRCUIT **2019 IFMAR Worlds (HUDY ARENA)**

●INDOOR ○OUTDOOR
●DIRT ○ASTROTURF ○CARPET ○GLASS ○WOOD
○WET ●DRY ○DUSTY ○SMOOTH ○BUMPY
●HARD PACKED ○CLAY ○BIUE GROOVE ○ _____
●LOW TRACTION ●MED TRACTION ○HIGH TRACTION

FRONT

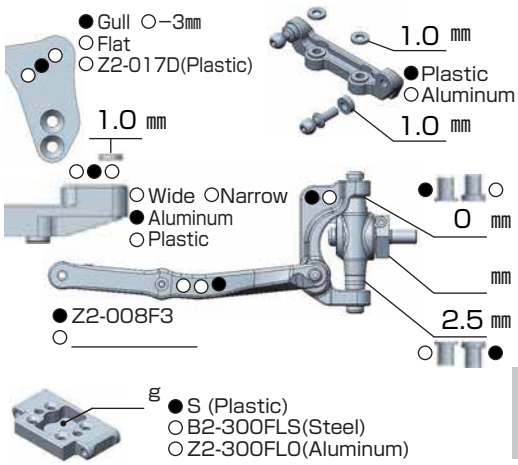

◆CAMBER ●←→○ 2.0 °

◆TOE ○IN ●OUT 0 °

◆RIDE HEIGHT 24 ㎜

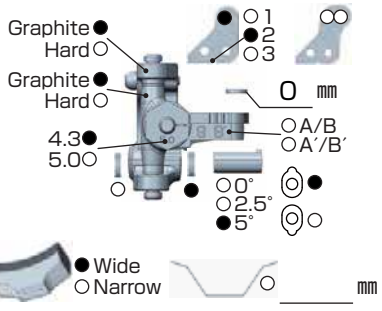

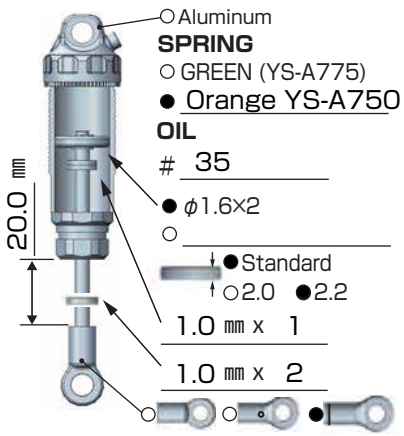

REAR

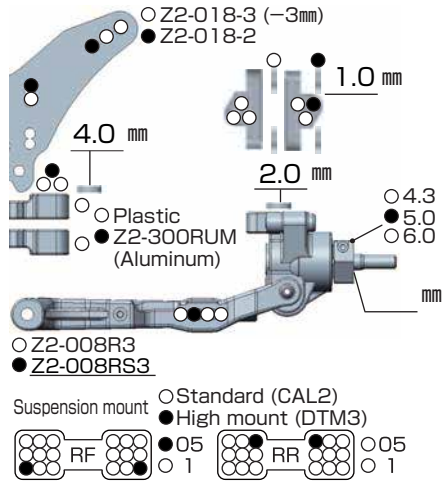

◆CAMBER ●←→○ 2.0 °

◆RIDE HEIGHT 22 ㎜

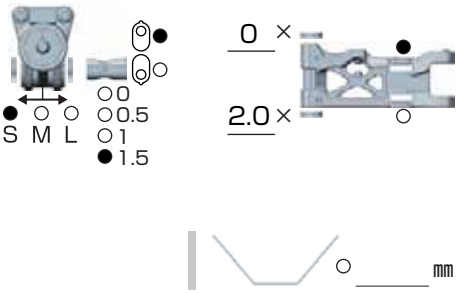

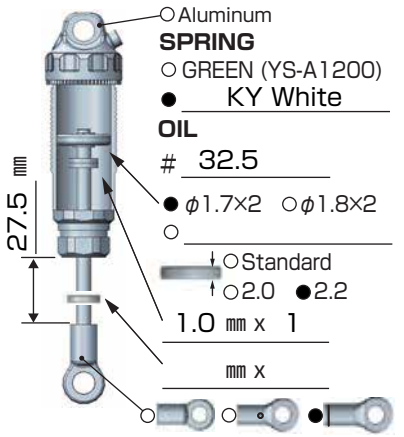

DRIVE

MOTOR	⇨	Muchmore 7.5T Rotor 12.0 ㎜
GEAR	⇨	Spur 80 T ／ Pinion 22 T : 2.6
BATTERY	⇨	Muchmore
ESC	○	YOKOMO RPXⅡ ●YOKOMO BL-PRO4
	○	

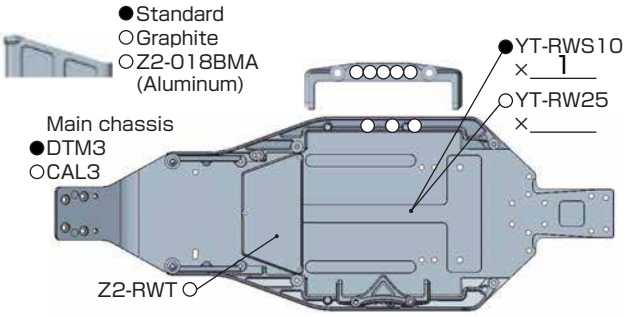

TIRE

FRONT			REAR		
TIRE	⇨	Proline 4 rib	TIRE	⇨	Proline Holeshot
INSERTS	⇨	Standard	INSERTS	⇨	Standard
WHEELS	⇨	YOKOMO	WHEELS	⇨	YOKOMO

OTHER

○Z2-DTM2W (Aero S-Type)
○Z2-CAL2W (LMR27)
● JC High clearance

COMMENT

Lays up gear box 2mm
Use long rear shock (same 4WD Rear siza)
Front wing on shock tower
Aluminum shock tower (Proto) Front & Rear
1 degree rear hub
5g behind motor
5g behind battery in each corner
Use JC center divider wing