www.petitrc.com

YZ-2 SETTING SHEET v3

P040
Arn0

DRIVER: KAITO

DATE:

CIRCUIT: HUDY ARENA

● INDOOR ○ OUTDOOR
○ WET ● DRY ○ DUSTY ○ SMOOTH ○ BUMPY ○ OTHER
○ LOW TRACTION ○ MED TRACTION ● HIGH TRACTION
○ CLAY ○ GRASS ○ BLUE GROOVE ○ ASTROTURF ○ DIRT ● CARPET ○ WOOD

FRONT

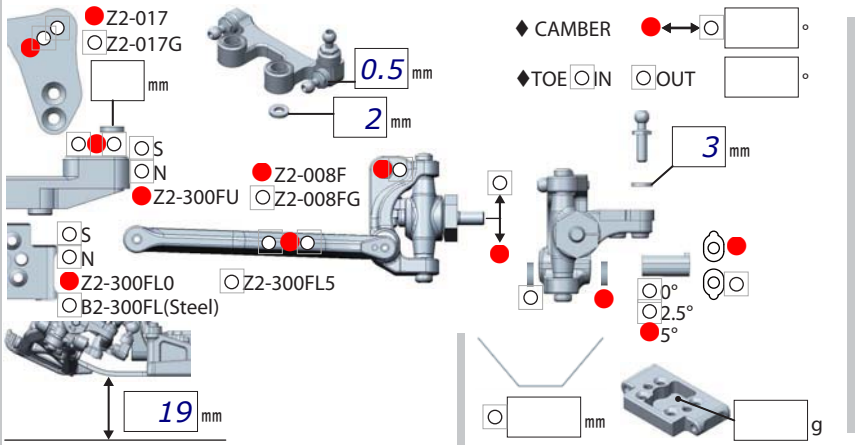

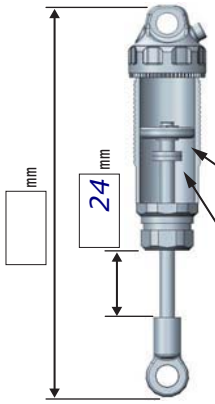

SPRING
● YELLOW (YS-A875)
○
OIL
450
○ #1 ○ #2 ○ #3
● 1.6 X 2
●
○
○
mm x

REAR

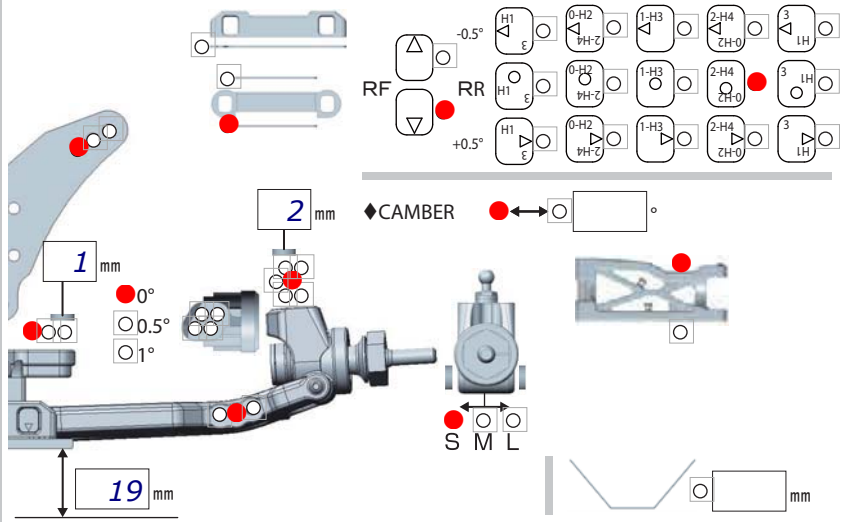

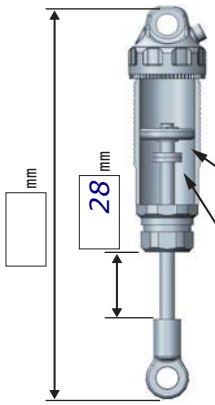

SPRING
○ GREEN (YS-A1200)
● ORANGE
OIL
350
○ #1 ○ #2 ○ #3
● 1.7 X 2
●
○
○
mm x

DRIVE

3000

MOTOR	♦ YOKOMO RP 6.5T M2 ○ Bonded ○ Sintered mm
GEAR	♦ Spur 80 T / Pinion 25 T: 2.6
BATTERY	♦ YOKOMO RP 4800
ESC	● Racing Performer X Series
	○

Battery placement

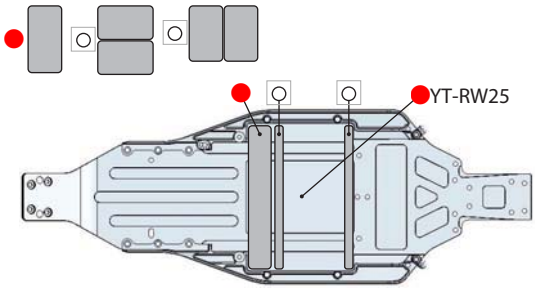

TIRE

FRONT		REAR	
TIRE	♦	TIRE	♦
INSERTS	♦	INSERTS	♦
WHEELS	♦	WHEELS	♦

OTHER

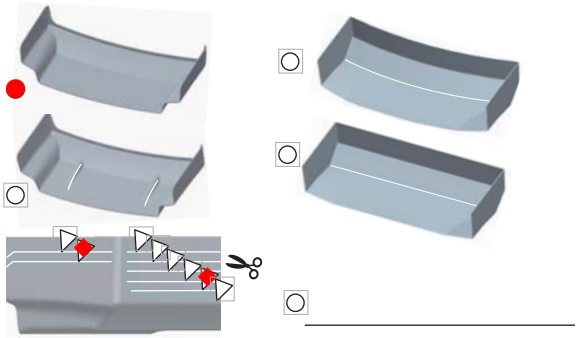

COMMENT