# YZ-2 SETTING SHEET

www.petitrc.com

P040v1

DRIVER: Lee Martin

DATE: 2015 / 01 / 19

CIRCUIT: TORCH

○ INDOOR ● OUTDOOR
● WET ○ DRY ○ DUSTY ○ OTHER
● LOW TRACTION ○ MED TRACTION ○ HIGH TRACTION
○ SMOOTH ○ BUMPY ○ BIUE GROOVE ● ASTROTURF
○ CARPET ○ WOOD

## FRONT

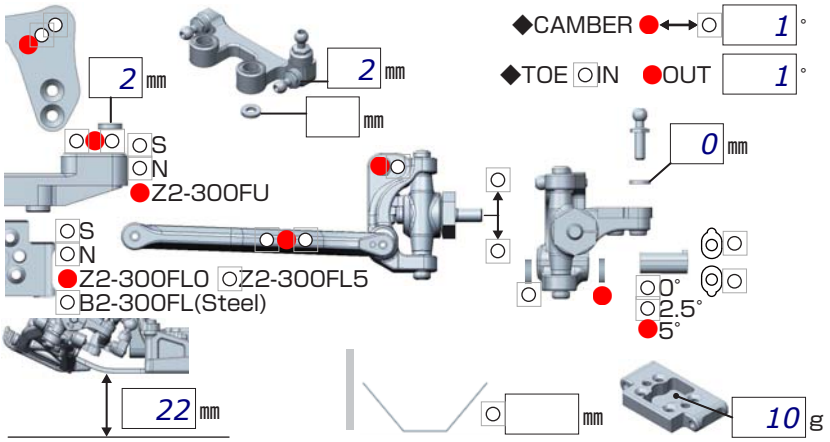


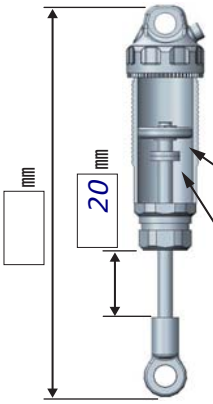


**SPRING**
● YELLOW (YS-A875)
○

**OIL**
# 250
○#1 ○#2 ○#3
○ 2x1.6mm
●
○
○
mm x

## REAR

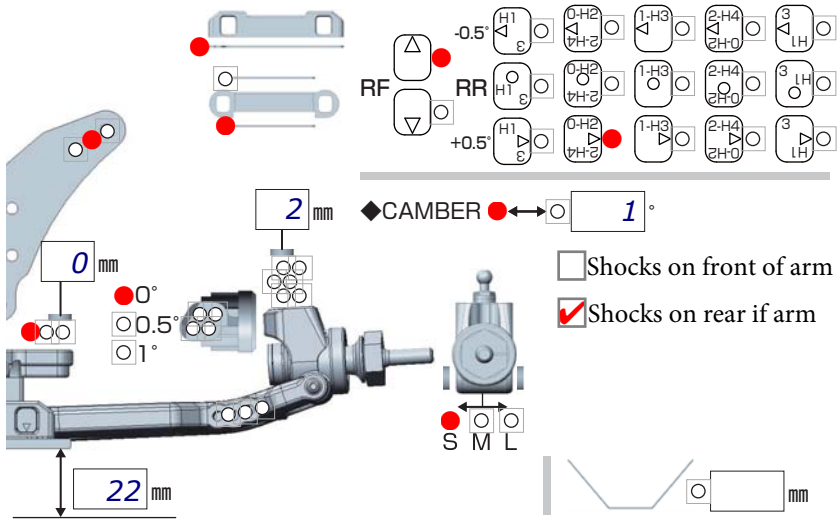


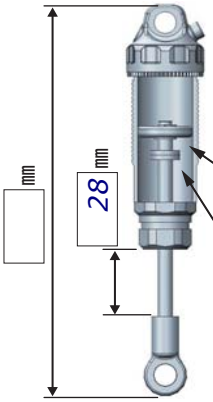


**SPRING**
● GREEN (YS-A1200)
○

**OIL**
# 250
○#1 ○#2 ○#3
○ 2x1.7mm
○
○
○
mm x

## DRIVE

MOTOR ➪ Muchmore 6.5 ○Bonded ○Sintered mm

GEAR ➪ Spur 80 T / Pinion 22 T : 2.6

BATTERY ➪ Protek Shorty

ESC ○ Racing Performer X Series

○ Muchmore Fleta Pro

Battery placement

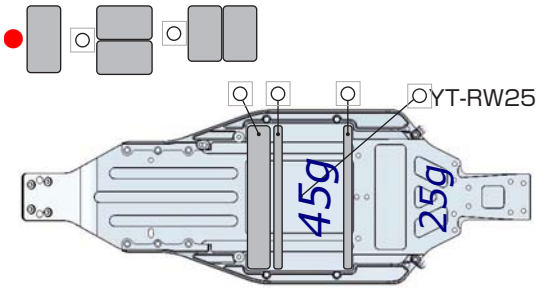


## TIRE

**FRONT**

TIRE ➪ Schumacher Green Mini Spike

INSERTS ➪ Schumacher Blue

WHEELS ➪ Proline

**REAR**

TIRE ➪ Ballistic Buggy Green spike

INSERTS ➪ Schumacher Blue

WHEELS ➪ Proline

## OTHER

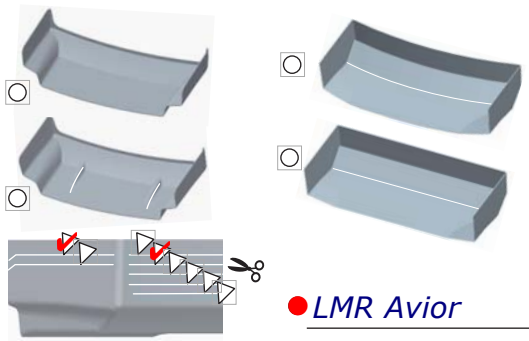


● LMR Avior

COMMENT

Xpert LM4401