www.petitrc.com

YZ-2 SETTING SHEET

v8

Arn0
C. Sturdy

DRIVER	Lee Martin	DATE	2016.01.30

CIRCUIT EOS Rd3, Mulheim Kaerlich

- ● INDOOR ○ OUTDOOR
- ○ WET ○ DRY ○ DUSTY ● SMOOTH ○ BUMPY ○ OTHER
- ○ LOW TRACTION ○ MED TRACTION ● HIGH TRACTION
- ○ CLAY ○ GRASS ○ BLUE GROOVE ○ ASTROTURF ○ DIRT
- ● CARPET ○ WOOD ○

FRONT

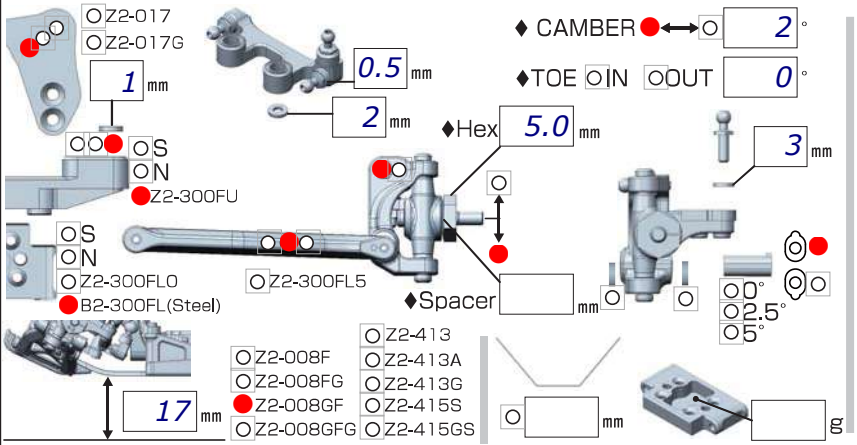

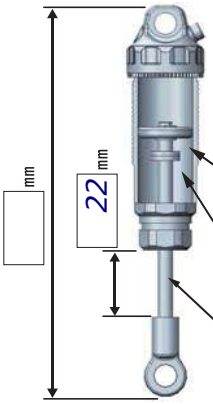

SPRING
○ YELLOW (YS-A875)
● Yatabe Red

OIL
450
○ #1 ○ #2 ○ #3
● 2x1.6
mm X

○ Z2-S2S (Kit)
● Z2-S2SD
○ B2-S812A

REAR

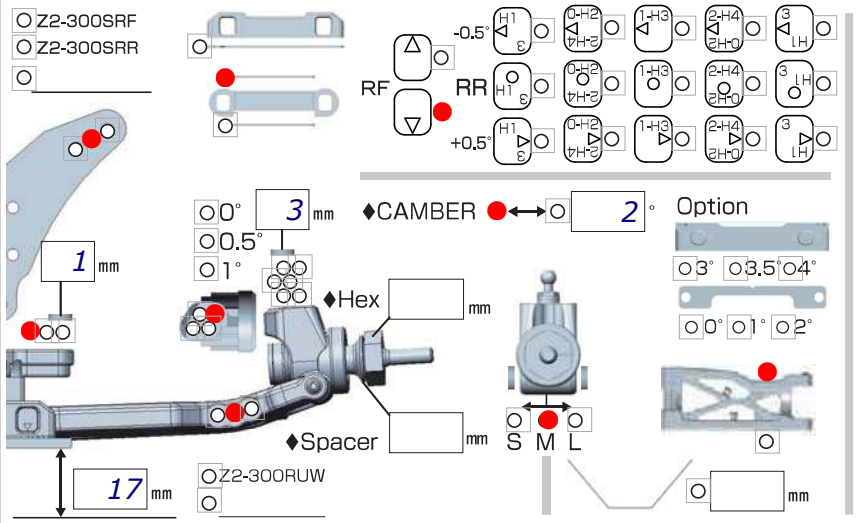

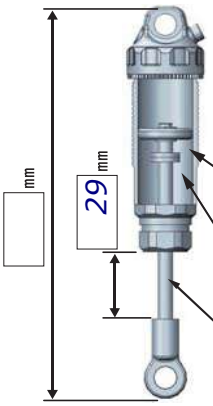

SPRING
○ GREEN (YS-A1200)
● Yatabe Green

OIL
350
○ #1 ○ #2 ○ #3
● 2x1.7
mm X

○ Z2-S2L (Kit)
● Z2-S2LD
○ B2-S812A

DRIVE

○ Kit
○ Z2-670V
● Z2-670VP

MOTOR	♦ RC Concept 6.5	○ Bonded ○ Sintered mm
GEAR	♦ Spur 80 T / Pinion 22 T: 2.6	
BATTERY	♦ RC Concept	
ESC	○ Racing Performer X Series	
	○ RC Concept	

Battery placement

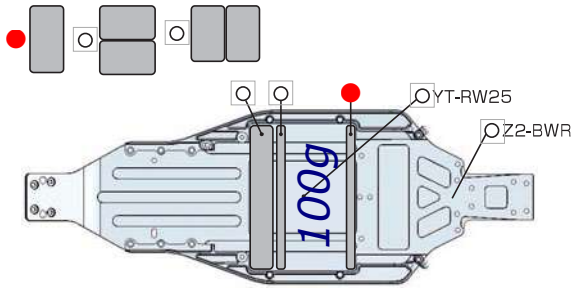

TIRE

FRONT		REAR	
TIRE	♦ Schumacher Cut Stagger	TIRE	♦ Schumacher Mini Pin
INSERTS	♦ None	INSERTS	♦ Schumacher Medium
WHEELS	♦ Schumacher	WHEELS	♦ Schumacher

OTHER

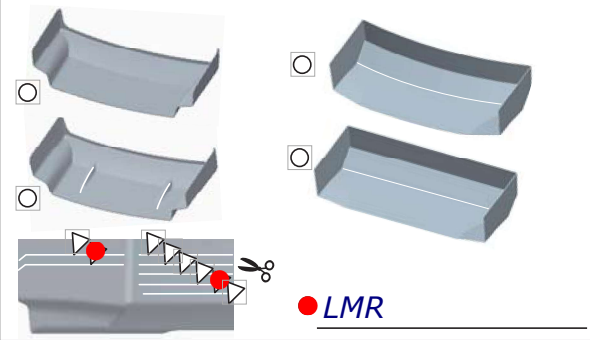

● LMR

COMMENT

Steering ackerman ball stud use short neck, B4-008R, B2-010RB, Z2-415G, Z2-101L, Z2-415R00, BM-S162, BM-172, Z2-TSS, Z2-TBS, YS-8BH, Z2-110
Use long shock end (front, SD-008RC)