www.petitrc.com

YZ-2 SETTING SHEET

P040
Arn0
v4

DRIVER	Lee Martin	DATE	2015/06/22

CIRCUIT Wet set up

○ INDOOR ● OUTDOOR
● WET ○ DRY ○ DUSTY ● SMOOTH ○ BUMPY ○ OTHER
● LOW TRACTION ○ MED TRACTION ○ HIGH TRACTION
○ CLAY ○ GRASS ○ BLUE GROOVE ● ASTROTURF ○ DIRT ○ CARPET ○ WOOD

FRONT

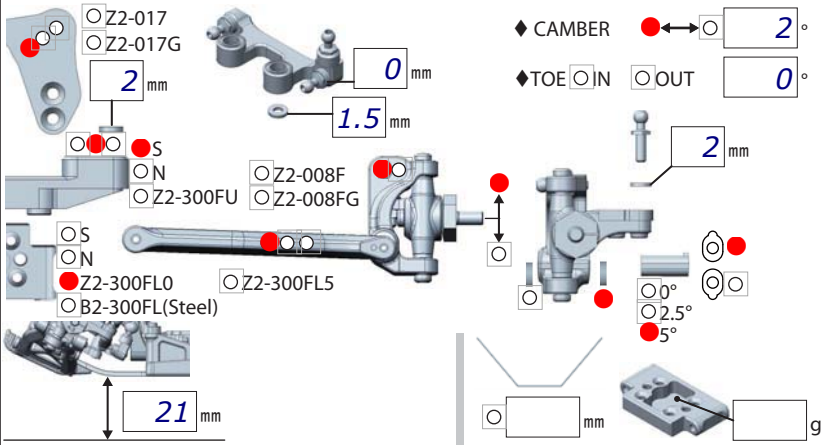

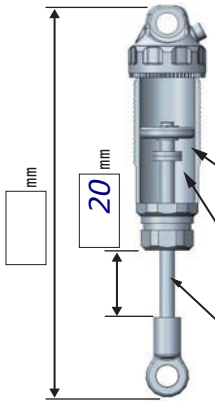

SPRING
● YELLOW (YS-A875)
○

OIL
AE 30
○ #1 ○ #2 ○ #3
● 2 x 1.6
● ○
○ ○
1 mm x 2
○ Z2-S2S (Kit) ○ Z2-S2SD

REAR

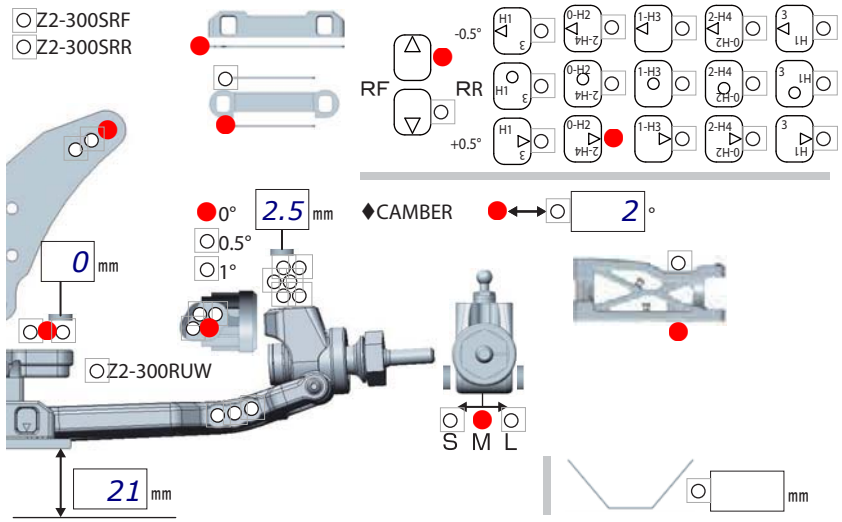

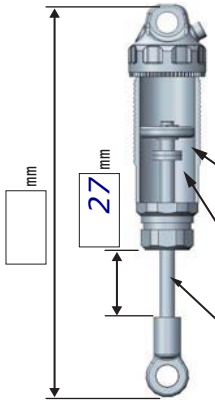

SPRING
● GREEN (YS-A1200)
○

OIL
AE 25
○ #1 ○ #2 ○ #3
○ 2 x 1.7
● ○
○ ○
mm x
○ Z2-S2L (Kit) ○ Z2-S2LD

DRIVE

○ Kit
○ Z2-670V

MOTOR	♦	○ Bonded ○ Sintered	mm
GEAR	♦ Spur	T ／ Pinion	T: 2.6
BATTERY	♦		
ESC	○ Racing Performer X Series		
	○		

Battery placement

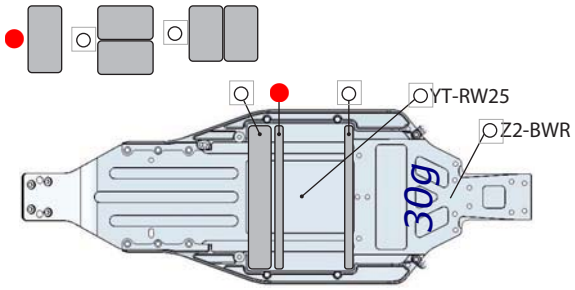

TIRE

FRONT		REAR	
TIRE	♦	TIRE	♦
INSERTS	♦	INSERTS	♦
WHEELS	♦	WHEELS	♦

OTHER

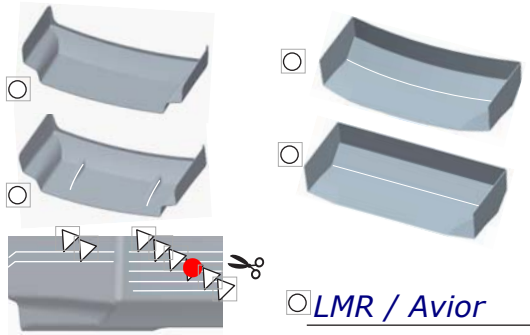

○ LMR / Avior

COMMENT

B4-008R rear arm
B-Max2 drive shaft (B2-010R)
All titanium screws & Turnbuckles
Aluminum link mount rear, ESC on top battery.
5.0mm hex hub front / 6.0mm hex hub rear
0.5mm wheel spacer rear