YZ-2 SETTING SHEET

www.petitrc.com

P040v1

DRIVER		DATE	/ /

CIRCUIT *CF3 Maisons Alfort*

○ INDOOR ● OUTDOOR
○ WET ● DRY ○ DUSTY ○ OTHER
○ LOW TRACTION ○ MED TRACTION ● HIGH TRACTION
○ SMOOTH ● BUMPY ○ BIUE GROOVE ● ASTROTURF
○ CARPET ○ WOOD

FRONT

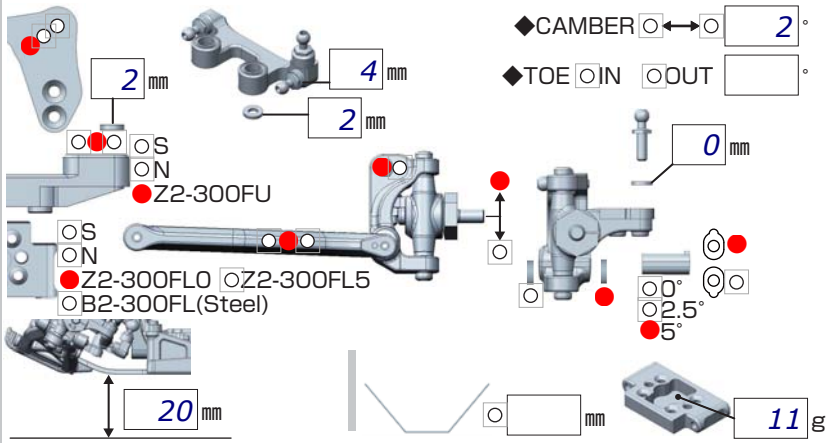

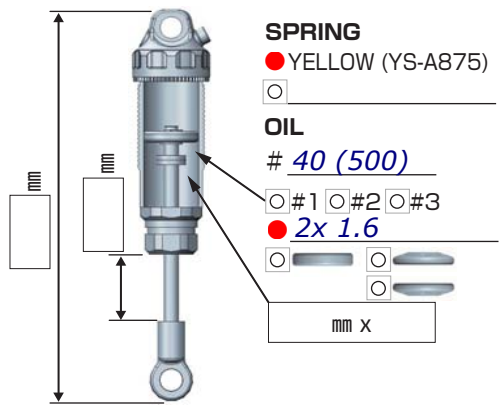

REAR

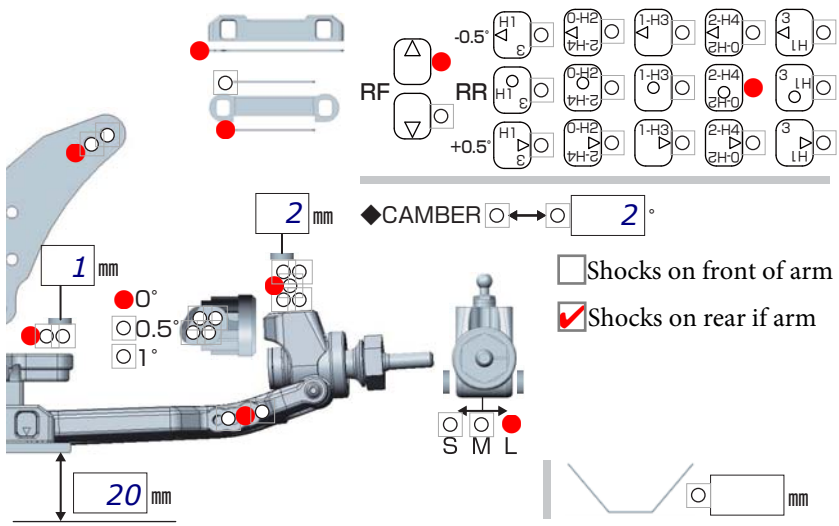

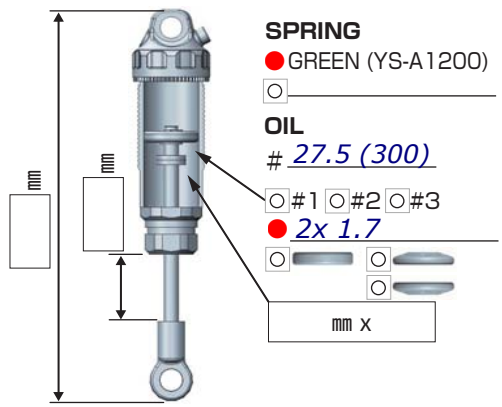

DRIVE

MOTOR ➪ *Reedy 8.5* ○ Bonded ○ Sintered mm

GEAR ➪ Spur *80* T / Pinion *25* T : 2.6

BATTERY ➪

ESC ○ Racing Performer X Series

○

Battery placement

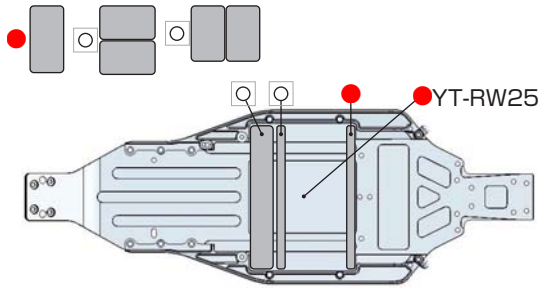

TIRE

FRONT		REAR	
TIRE	➪ *Stagger cut*	TIRE	➪ *Spike Yellow*
INSERTS	➪	INSERTS	➪
WHEELS	➪	WHEELS	➪

OTHER

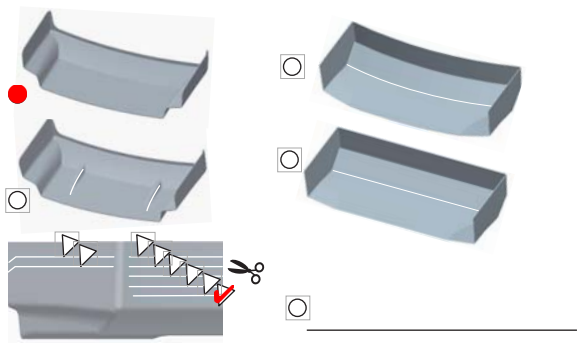

COMMENT

+ 20grs devant servo
+ 30 grs sous moteur
Triangles AV/ Support Gull
Dual Rate 70% (radio)
Speed Steering (radio) -30