YZ-2 SETTING SHEET

www.petitrc.com

P040v1

DRIVER	C.Svensson	DATE	/ /

CIRCUIT HRCK Swedish Nationals

○ INDOOR ● OUTDOOR
○ WET ● DRY ○ DUSTY ○ OTHER
○ LOW TRACTION ● MED TRACTION ○ HIGH TRACTION
● SMOOTH ○ BUMPY ○ BIUE GROOVE ○ ASTROTURF
○ CARPET ○ WOOD

FRONT

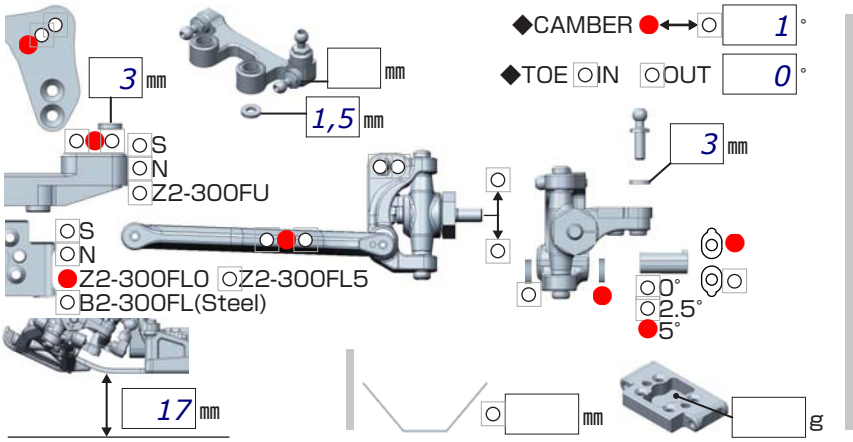

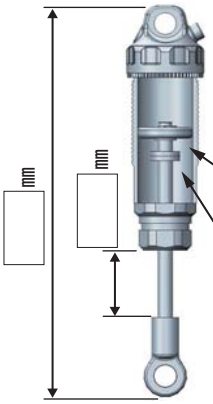

SPRING
○ YELLOW (YS-A875)
○ Green

OIL
40
○ #1 ○ #2 ○ #3
○ 1,6x2
○ ○
○ ○
mm x

REAR

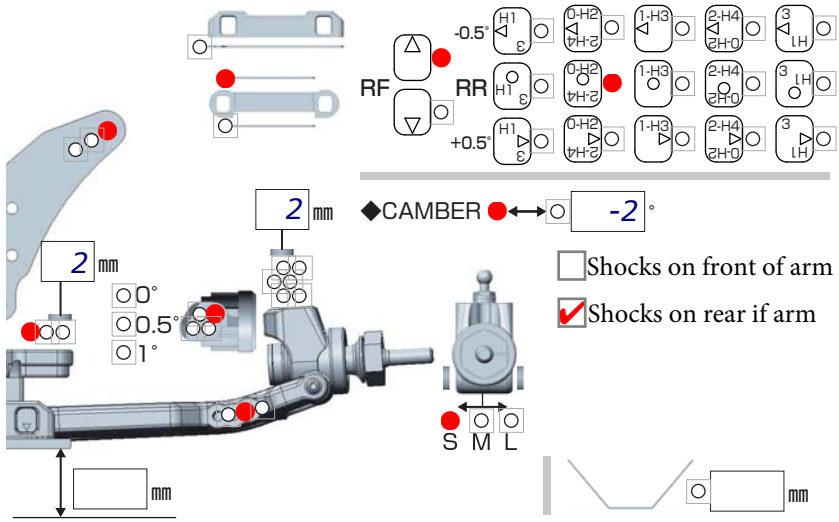

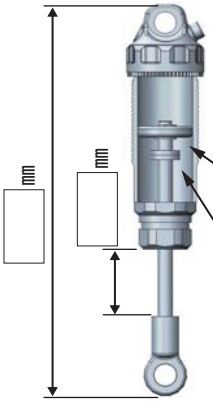

SPRING
○ GREEN (YS-A1200)
○ orange

OIL
35
○ #1 ○ #2 ○ #3
○ 1,7x2
○ ○
○ ○
mm x

DRIVE

MOTOR	➪ Orion 7,5	○ Bonded ○ Sintered mm
GEAR	➪ Spur 80 T / Pinion 23 T : 2.6	
BATTERY	➪ Orion Shorty	
ESC	○ Racing Performer X Series	
	○ Orion	

Battery placement

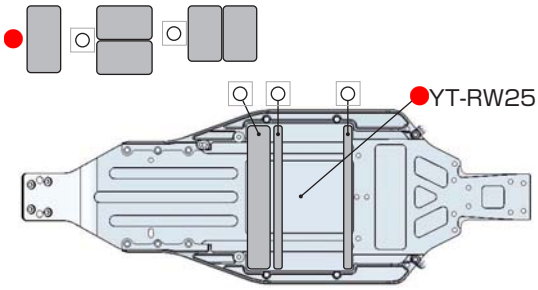

TIRE

FRONT		REAR	
TIRE	➪ Hand out	TIRE	➪ Hand out
INSERTS	➪ Hand out	INSERTS	➪ Hand out
WHEELS	➪	WHEELS	➪

OTHER

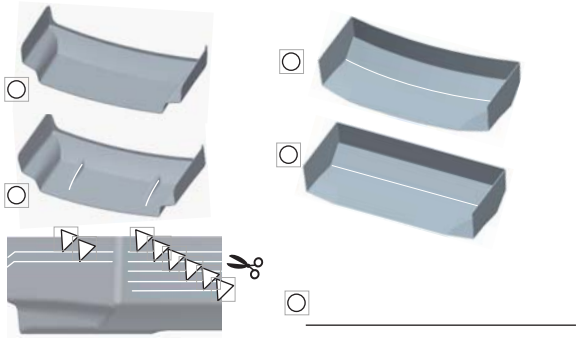

COMMENT

LMR wing
TI Screws
Ti turnbuckle
25g under motor