YZ-2 SETTING SHEET

www.petitrc.com

P040v1

DRIVER	Chris Sturdy
DATE	2016 / /

CIRCUIT: GCRC Raceway

- ● INDOOR ○ OUTDOOR
- ● WET ○ DRY ○ DUSTY ○ OTHER
- ● LOW TRACTION ○ MED TRACTION ○ HIGH TRACTION
- ● SMOOTH ○ BUMPY ○ BIUE GROOVE ○ ASTROTURF
- ○ CARPET ○ WOOD

FRONT

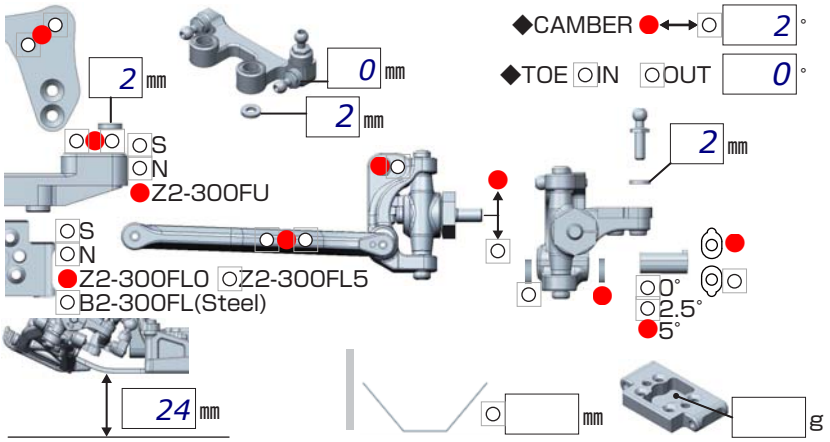

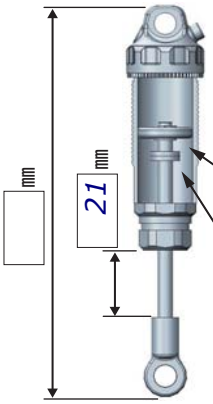

SPRING
○ YELLOW (YS-A875)
● Orange

OIL
32.5
○ #1 ○ #2 ○ #3
● 1.6x2
mm x 1

REAR

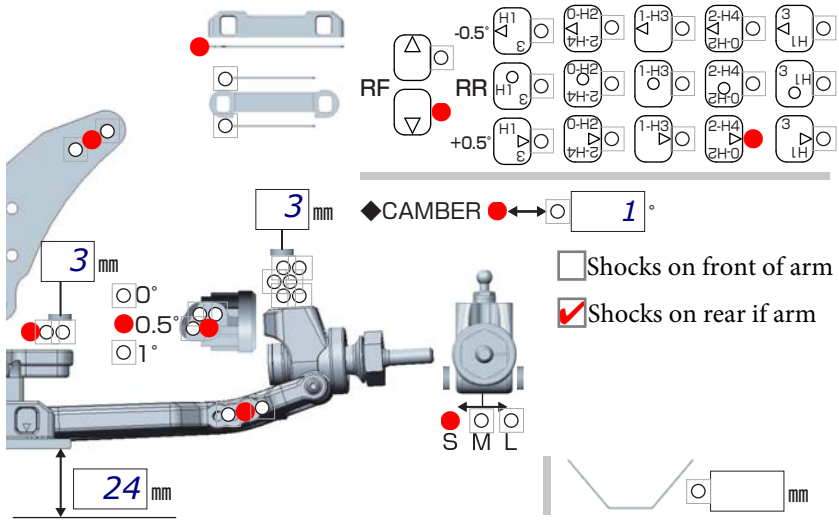

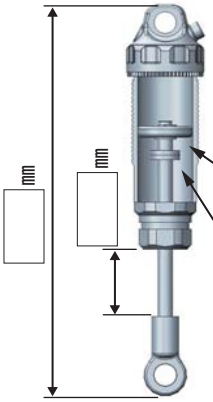

SPRING
● GREEN (YS-A1200)
○

OIL
32.5
○ #1 ○ #2 ○ #3
● 1.7x2
mm x 1

DRIVE

20K

MOTOR	Fantom FR-1 8.5T ○ Bonded ○ Sintered mm
GEAR	Spur 80 T / Pinion 22 T : 2.6
BATTERY	Fantom Shorty 5000
ESC	○ Racing Performer X Series
	● Hobbywing

Battery placement

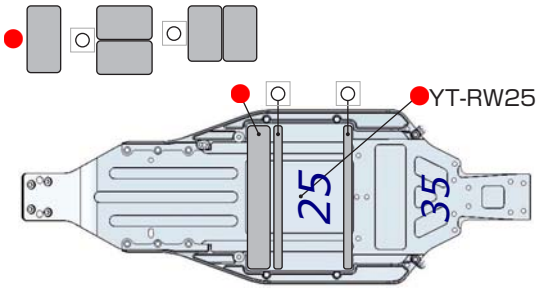

TIRE

FRONT		REAR	
TIRE	Jconcepts Smoothies Green	TIRE	Jconcepts Smoothie Green
INSERTS	Dirt-Tech Lugs cut off	INSERTS	Dirt-Tech Lugs cut off
WHEELS	Jconcepts Bullit	WHEELS	Jconcepts Bullit

OTHER

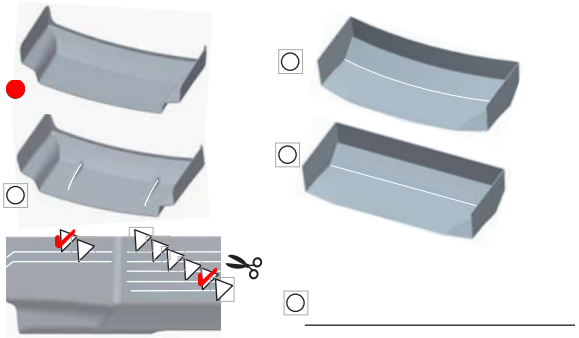

COMMENT

Ti Screws, Ti TurnBuckles, Z2-300RUW.
2-H4< in RF Block, 35g Under Gearbox, 10g on back of servo, 5.0 Hex Front and Rear.
No Rubber under Gearbox