www.petitrc.com

YZ-2 SETTING SHEET

P040
Arn0
v6

DRIVER	Carson Wernimont	DATE	August 6-9 2015

CIRCUIT SRS Raceway

- ● INDOOR ○ OUTDOOR
- ● WET ○ DRY ○ DUSTY ● SMOOTH ● BUMPY ○ OTHER
- ○ LOW TRACTION ○ MED TRACTION ● HIGH TRACTION
- ● CLAY ○ GRASS ○ BLUE GROOVE ○ ASTROTURF ○ DIRT ○ CARPET ○ WOOD

FRONT

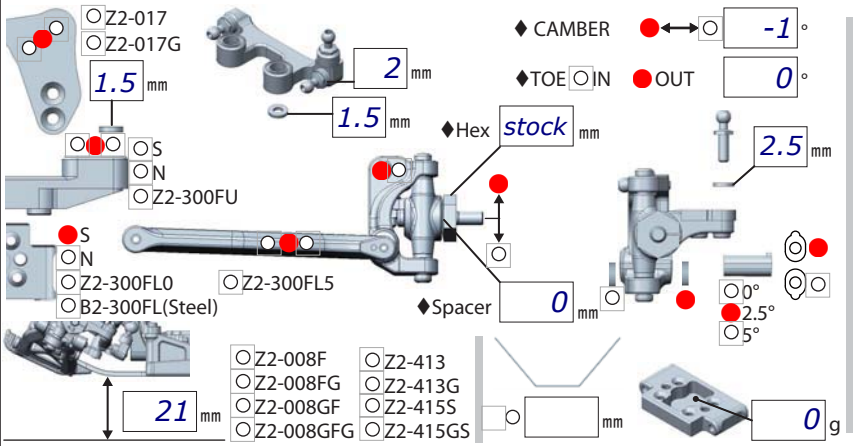

SPRING
○ YELLOW (YS-A875)
○ Yokomo Green

OIL
32.5 AE
○ #1 ○ #2 ● #3
○ 1.4mm x 3
1 mm x 1

○ Z2-S2S (Kit) ○ Z2-S2SD

REAR

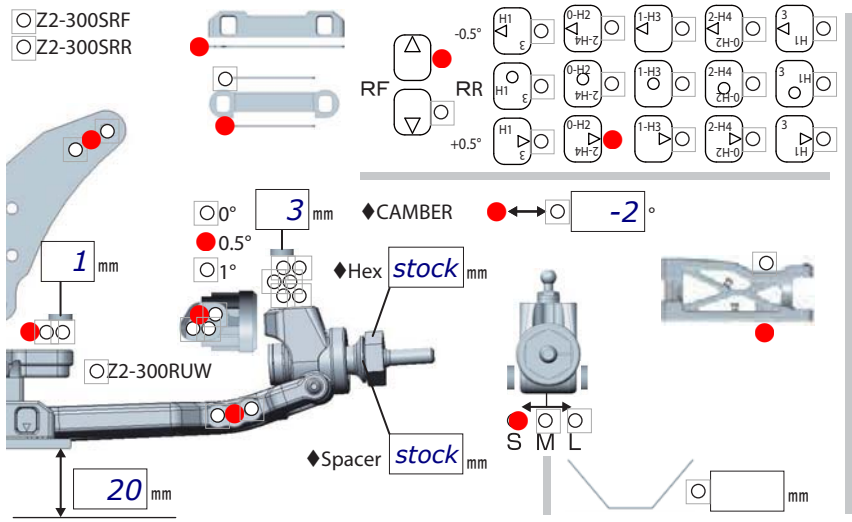

SPRING
○ GREEN (YS-A1200)
○ Yokomo Orange

OIL
32,5 AE
○ #1 ● #2 ○ #3
○ 1.7mm x 2
0 mm x

○ Z2-S2L (Kit) ○ Z2-S2LD

DRIVE

_____

○ Kit
○ Z2-670V

MOTOR	♦ Reedy Sonic 7.5 ○ Bonded ○ Sintered mm
GEAR	♦ Spur 80 T / Pinion 24 T: 2.6
BATTERY	♦ Reedy 3900 Low Profile
ESC	○ Racing Performer X Series
	○ Reedy Black Box

Battery placement

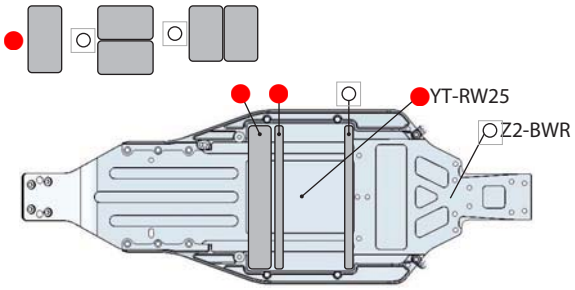

TIRE

FRONT		REAR	
TIRE	♦ Proline Prime	TIRE	♦ Proline Prime
INSERTS	♦ Proline	INSERTS	♦ Proline
WHEELS	♦ Proline	WHEELS	♦ Proline

OTHER

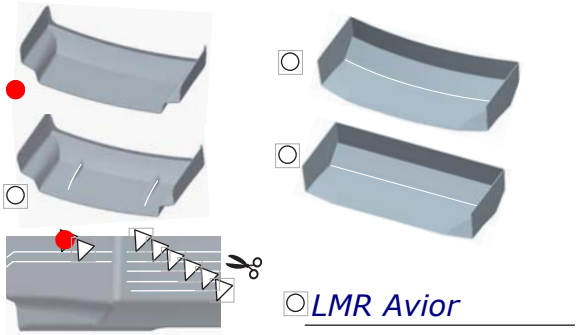

○ LMR Avior

COMMENT

B4-008R rear arm
B-Max2 drive shaft (B2-010R)
Alloy rear link mount
Steel rear pivots
All titanium screws
All titanium turnbuckles
30 grams behind the motor