YZ-2 DTM SETTING SHEET Ver.01

DRIVER	Ryan Maifield
DATE	2017/08/27
CIRCUIT	OCRC Raceway - Surf City Classic 2017

● INDOOR ○ OUTDOOR
● WET ○ DRY ○ DUSTY ○ SMOOTH ○ BUMPY ○ OTHER
○ LOW TRACTION ○ MED TRACTION ● HIGH TRACTION
● CLAY ○ GRASS ○ BLUE GROOVE ○ ASTROTURF ○ DIRT
○ CARPET ○ WOOD ○

FRONT

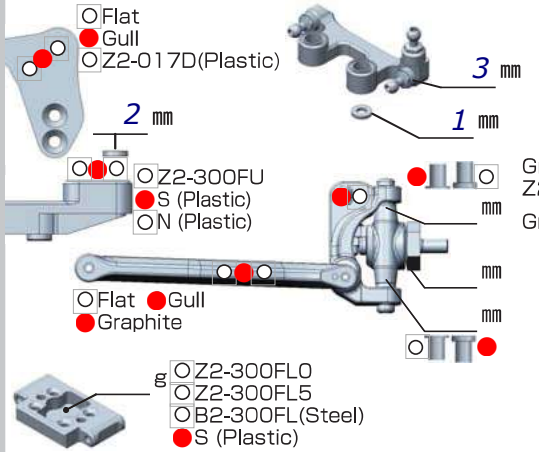

◆CAMBER ● ↔ ○ 1.5 °

◆TOE ○ IN ● OUT 1 °

◆RIDE HEIGHT 22 mm

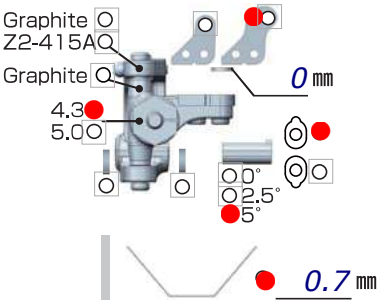

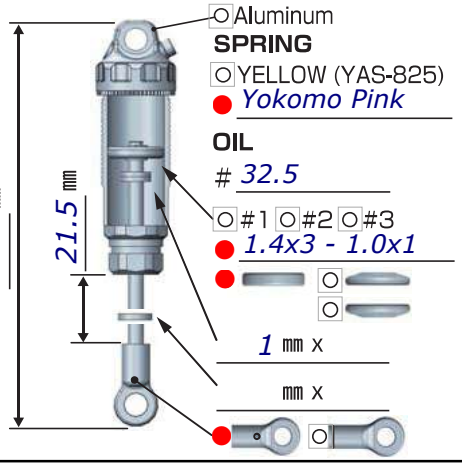

REAR

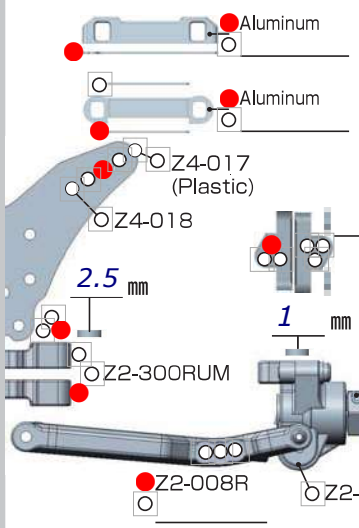

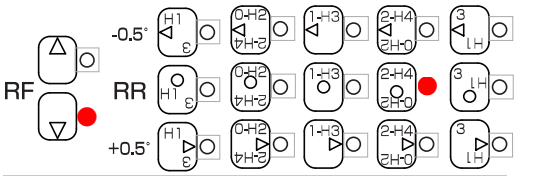

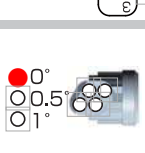

◆CAMBER ● ↔ ○ 1 °

◆RIDE HEIGHT 22 mm

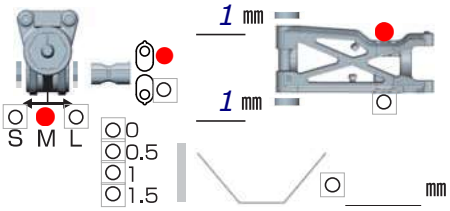

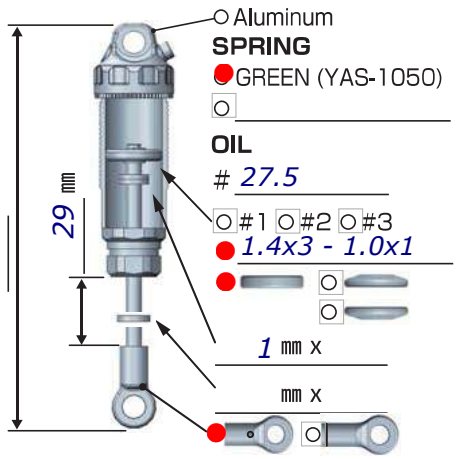

DRIVE

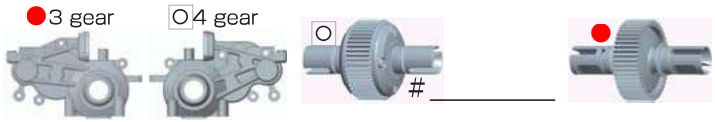

MOTOR	♦ Team Orion 6.5 Ultimate Rotor mm
GEAR	♦ Spur 80T / Pinion 21T : 2.6
BATTERY	♦ Team Orion HMX Pro 10 Modified ESC
ESC	♦ Team Orion 4500 Shorty Li-Po Battery
SETTING	♦

Battery placement

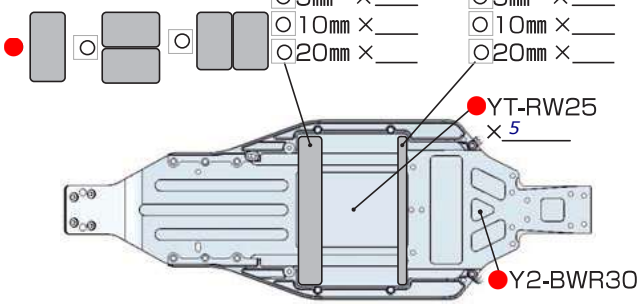

TIRE

FRONT		REAR	
TIRE	♦ JConcepts Dirt Webs, Gold	TIRE	♦ JConcepts Space Bars, Gold
INSERTS	♦ JConcepts Closed cell	INSERTS	♦ JConcepts Closed Cell
WHEELS	♦ JConcepts	WHEELS	♦ JConcepts

OTHER

○ Z2-1007F

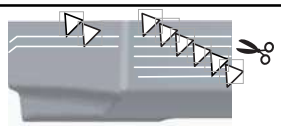

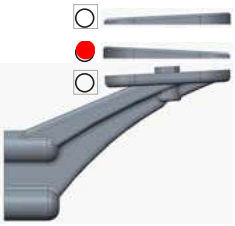

● JConcepts

COMMENTS

- JConcepts F2 Body
- Rear hub bushing: 0
- Front c-hub spacers: 1.5mm above, 1mm below steering knuckle

Arn0 PetitRC.com