YZ-2 DTM SETTING SHEET Ver.01

DRIVER	ROB CAMPBELL	DATE	DEC 30 2017

CIRCUIT RADIOACTIVE RACEWAY

- ● INDOOR ○ OUTDOOR
- ● WET ● DRY ○ DUSTY ○ SMOOTH ○ BUMPY ○ OTHER
- ○ LOW TRACTION ● MED TRACTION ● HIGH TRACTION
- ● CLAY ○ GRASS ○ BLUE GROOVE ○ ASTROTURF ○ DIRT
- ○ CARPET ○ WOOD ○

FRONT

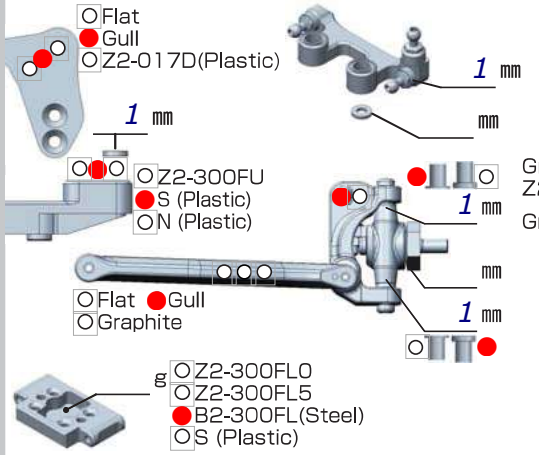

◆CAMBER ○ ⟷ ○ 2 °

◆TOE ○ IN ● OUT 1 °

◆RIDE HEIGHT 20 mm

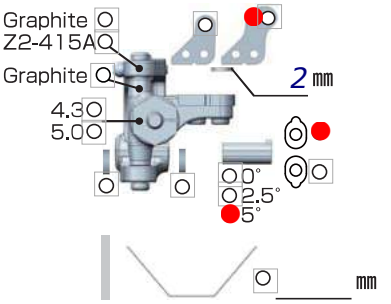

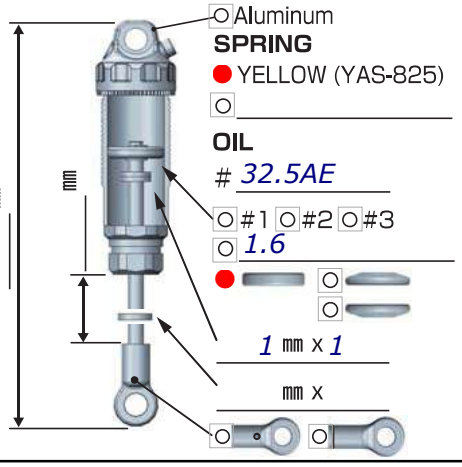

REAR

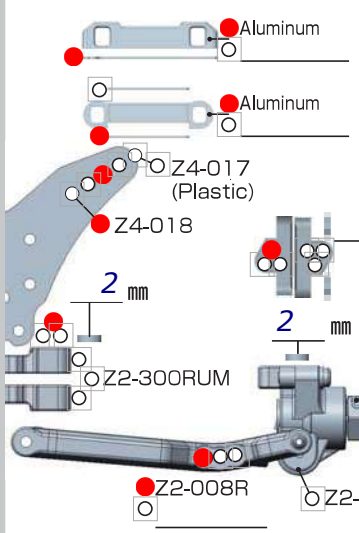

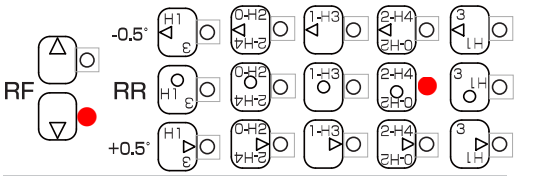

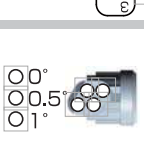

◆CAMBER ○ ⟷ ○ 1 °

◆RIDE HEIGHT 20 mm

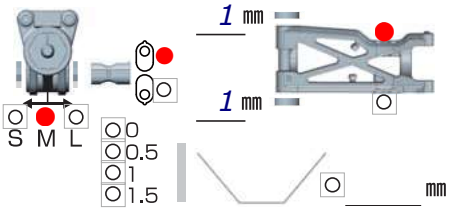

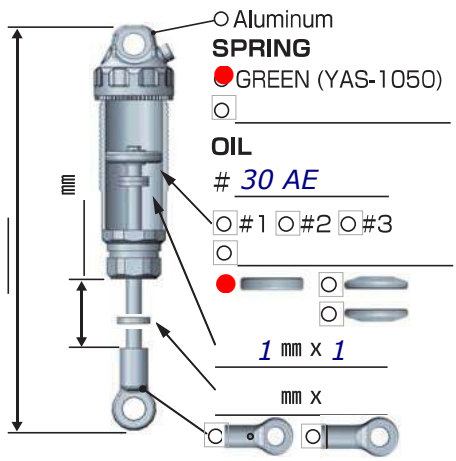

DRIVE

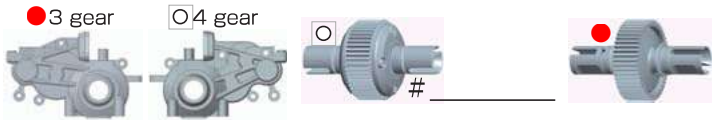

MOTOR	♦ 7.5 orion Rotor mm
GEAR	♦ Spur 84T / Pinion 23T : 2.6
BATTERY	♦ Protek 4900
ESC	♦ Orion HMX
SETTING	♦

Battery placement

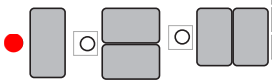

○ 5mm ×
○ 10mm ×
○ 20mm ×

○ 5mm ×
○ 10mm ×
○ 20mm ×

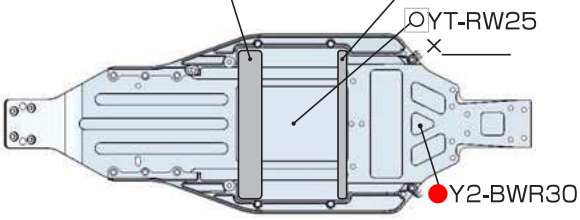

TIRE

FRONT		REAR	
TIRE	♦ Sweep Non-Skid - Silver	TIRE	♦ Sweep Non-Skid - Silver
INSERTS	♦ Sweep Orange	INSERTS	♦ Sweep Orange
WHEELS	♦ Yokomo	WHEELS	♦ Yokomo

OTHER

○ Z2-1007F

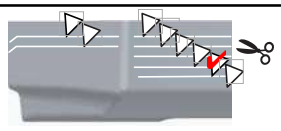

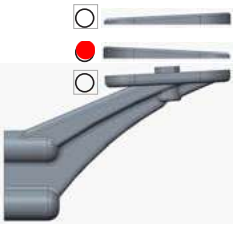

○

COMMENTS

CUT WATERFALL
105G PLATE UNDER BATTERY
ALUM ACKERMAN PLATE WITH BALL STUD MOD
JCONCEPTS F2 BODY

PetitRC.com Am0