YZ-2 DTM SETTING SHEET Ver.01

DRIVER	Jake Thayer- OCRC	DATE	11/2017

CIRCUIT

- ● INDOOR ○ OUTDOOR
- ● WET ○ DRY ● DUSTY ● SMOOTH ○ BUMPY ○ OTHER
- ○ LOW TRACTION ○ MED TRACTION ● HIGH TRACTION
- ● CLAY ○ GRASS ○ BLUE GROOVE ○ ASTROTURF ○ DIRT
- ○ CARPET ○ WOOD ○

FRONT

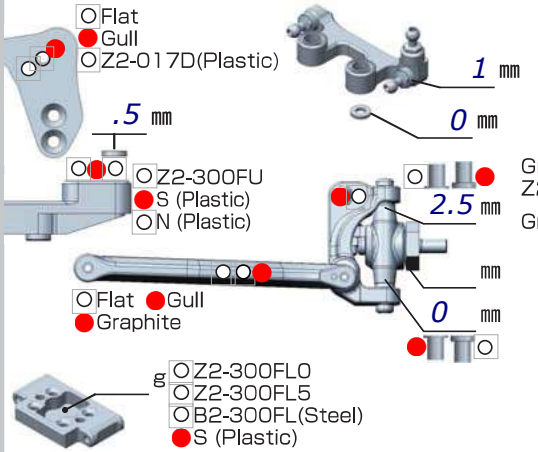

◆CAMBER ○ ⟷ ○ -1 °

◆TOE ○ IN ● OUT 1 °

◆RIDE HEIGHT 22 mm

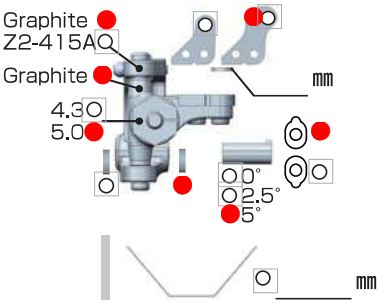

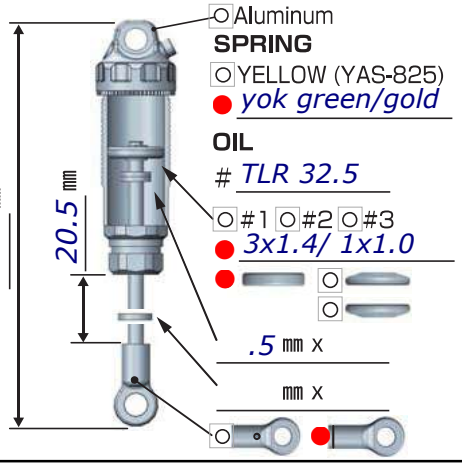

REAR

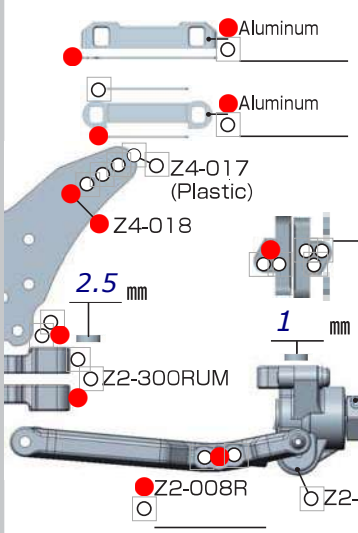

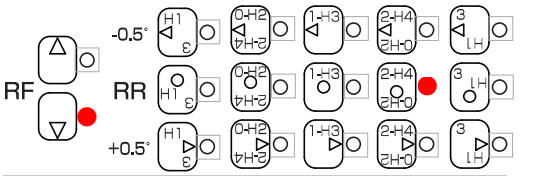

◆CAMBER ○ ⟷ ○ -1.5 °

◆RIDE HEIGHT 22 mm

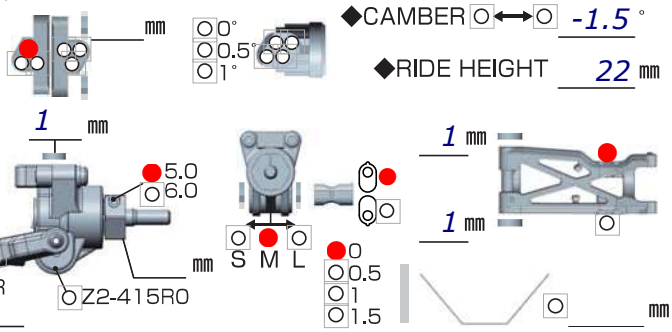

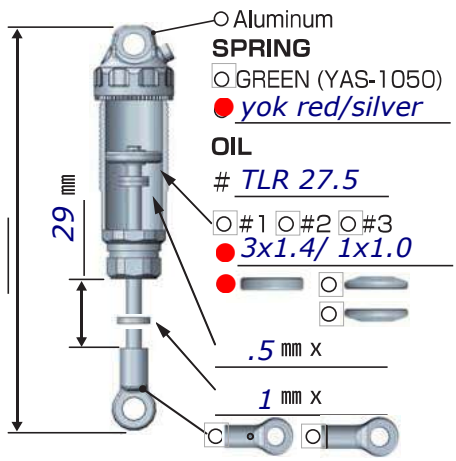

DRIVE

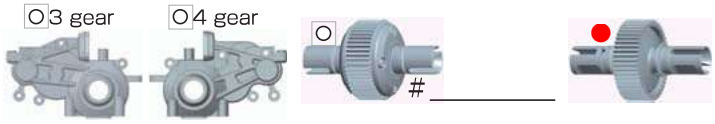

MOTOR	♦ Schuurspeed 7.5t	Rotor 12.0 mm
GEAR	♦ Spur 80T / Pinion 21T : 2.6	
BATTERY	♦ Protek LIHV 4900	
ESC	♦ Hobbywing XR10 Pro	
SETTING	♦	

Battery placement

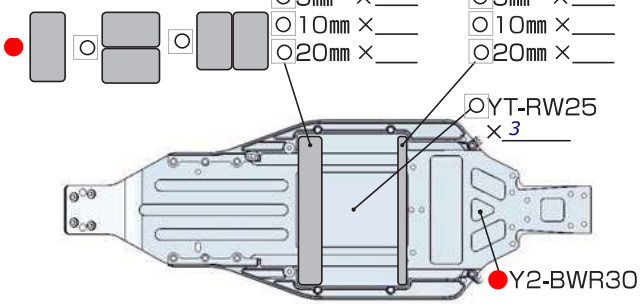

TIRE

FRONT		REAR	
TIRE	♦ JConcepts Dirt Webs- Gold	TIRE	♦ JConcepts Space Bars- Gold
INSERTS	♦ JConcepts Dirt Tech	INSERTS	♦ JConcepts Dirt Tech
WHEELS	♦ JConcepts Mono	WHEELS	♦ JConcepts Mono

OTHER

○ Z2-1007F

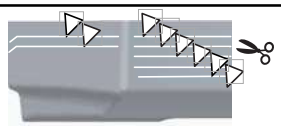

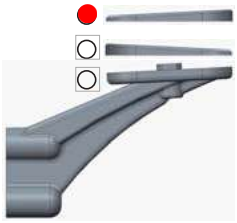

● JC Aero- moved forward 8mm

COMMENTS

graphite front caster blocks/spindles,bulkhead mounts-alum front axles,Yokomo ti screws and turnbuckles, ti ballstuds, alum shock bushings w/ plastic caps, ti-coated shock shafts, RC Speed Secrets pistons-2H4> hinge pin inserts front and rear, arrows facing out (widens pivot .5mm) , .5mm shim on rear axle behind bearing-battery taped in against waterfall,75g under battery-JC F2 body/wings

PetitRC.com Am0