EDITABLE

B-MAX4 SETTING SHEET Ver.01

DRIVER Tom Yardy | DATE 10 /05/2009

CIRCUIT BRCA Nationals - Talywain

○ INDOOR ⊙ OUTDOOR
○ WET ⊙ DRY ○ DUSTY ○ OTHER
○ LOW TRACTION ○ MED TRACTION ⊙ HIGH TRACTION
○ SMOOTH ⊙ BUMPY ○ SANDY ⊙ GRASS ○ BIUE GROOVE

FRONT

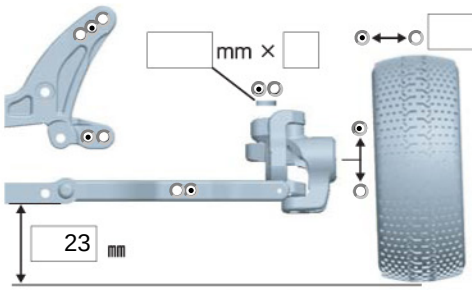

mm ×
1 °
23 mm
◆TOE-IN (+) / OUT(−) 0 °

mm

⊙ DIFF
○ ONE-WAY

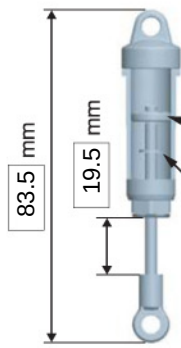

83.5 mm
19.5 mm

SPRING
⊙ BLACK
○

OIL
40 wt AE
○ #1 ⊙ #2 ○ #3 ○ #4

0 mm x

REAR

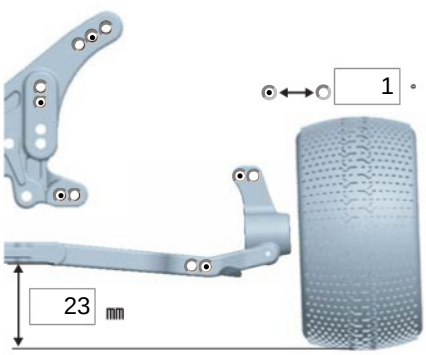

1 °
23 mm

○ S
○ M
⊙ L

1.2 mm

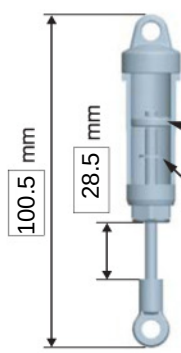

100.5 mm
28.5 mm

SPRING
○ BLACK
⊙ Yokomo Orange

OIL
25 wt AE
⊙ #1 ○ #2 ○ #3 ○ #4

0 mm x

Am0 at petitrc.com

DRIVE

○ LOCK

SPER
⊙ 87T
○ T

PINION
○ 18T: 2.35
⊙ 21 T

MOTOR ➪ Novak 5.5R ○ Bonded ⊙ Sintered mm
BRUSHES ➪
BATTERY ➪ NimH
ESC ○ MATRIX ISTC ○ VFS-1 CompⅢ
⊙ Novak GTB

TIRE

FRONT
TIRE ➪ Schumacher Yellow Spike
INSERTS ➪ Edit Purple
WHEELS ➪ Associated

REAR
TIRE ➪ Schumacher Yellow Spike
INSERTS ➪ Edit Purple
WHEELS ➪ Associated

OTHER

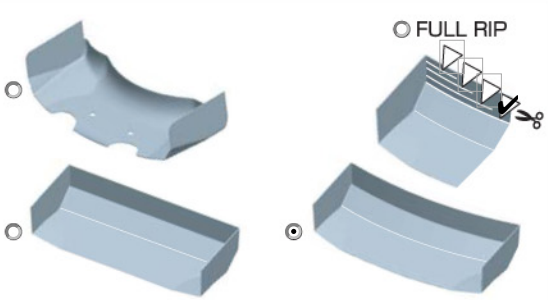

○ FULL RIP

COMMENT

Front tyres: outer row cutted
Edit 7" high downforce wing: No real benefit sought from its design, it is just made from a very strong and robust lexan.