B-MAX4
SETTING SHEET Ver.03

DRIVER *Tom Yardy* | DATE *2010 / 06 / 06*

CIRCUIT *Eden Park Raceway*

○ INDOOR ☑ OUTDOOR
○ WET ☑ DRY ○ DUSTY ○ OTHER
○ LOW TRACTION ○ MED TRACTION ☑ HIGH TRACTION
○ SMOOTH ☑ BUMPY ○ SANDY ○ GRASS ○ BIUE GROOVE

FRONT

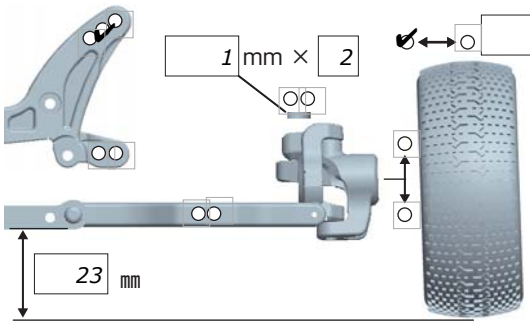

1 mm × 2

23 mm

◆TOE-IN (+) / OUT(−) 0 °

☑ ↔ ○ 1 °

○1.0 ○1.1
○1.2 ○1.3
○1.4

☑ DIFF
○ ONE-WAY

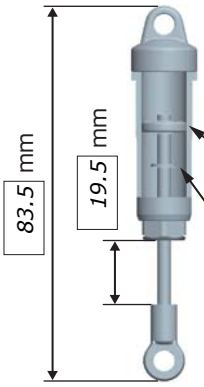

☑ X SHOCK
SPRING
○ BLACK
☑ *Purple*
OIL
35
○ #1 ○ #2 ○ #3 ○ #4
☑ *Black*

0 mm x

REAR

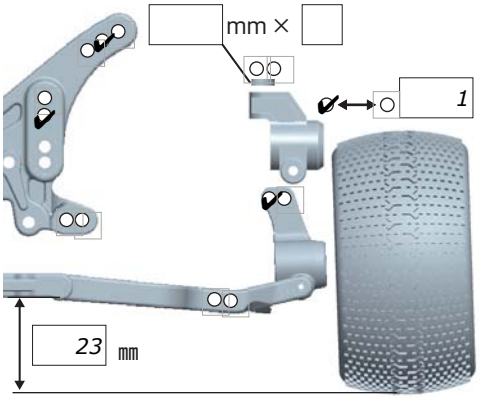

mm ×

☑ ↔ ○ 1 °

23 mm

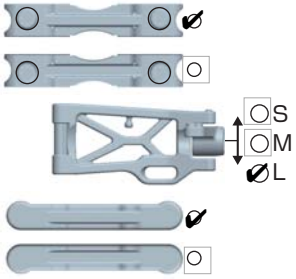

○ S
○ M
☑ L

○1.0 ○1.1
○1.2 ○1.3
○1.4

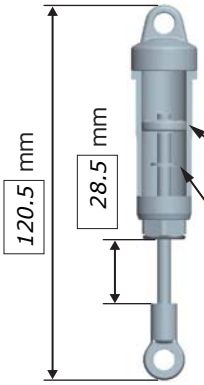

☑ X SHOCK
SPRING
○ BLACK
☑ *Green*
OIL
35
○ #1 ○ #2 ○ #3 ○ #4
☑ *White*

0 mm x

DRIVE

SPUR
☑ 87T
○ T

PINION
○ 18T: 2.35
☑ *21* T

○ LOCK

MOTOR ➪ *Novak 5.5* ○ Bonded ☑ Sintered mm
BRUSHES ➪
BATTERY ➪ *Reedy 4200 LiPo*
ESC ○ NOSRAM PEARL evo. ISTC
☑ *Novak*

www.PetitRC.com

TIRE

FRONT
TIRE ➪ *Schumacher Yellow*
INSERTS ➪ *Medium*
WHEELS ➪ *Associated*

REAR
TIRE ➪ *Schumacher Yellow*
INSERTS ➪ *Medium*
WHEELS ➪ *Associated*

OTHER

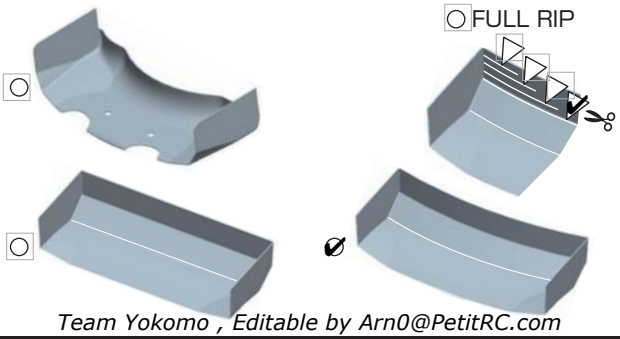

○ FULL RIP

Team Yokomo , Editable by Arn0@PetitRC.com

COMMENT

Front tyres outer row cut off
Car weight: 1730grs
New Big Bore Green rear spring
0.5° rear hubs