B-MAX4 II SETTING SHEET Ver.01

DRIVER: Robert batlle | DATE: 03/13

CIRCUIT: EOS Austria

- ● INDOOR ○ OUTDOOR
- ○ WET ● DRY ○ DUSTY ○ OTHER
- ○ LOW TRACTION ○ MED TRACTION ● HIGH TRACTION
- ○ SMOOTH ○ BUMPY ○ BLUE GROOVE ○ ASTROTURF

FRONT

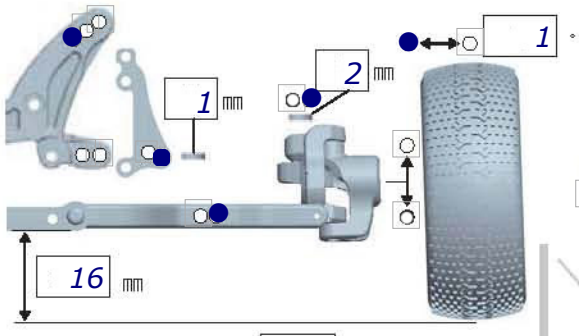

◆TOE-IN (+) / OUT(−) -1 °

○1.0 ○1.1
○1.2 ○1.3
●1.4

●DIFF
○ONE-WAY

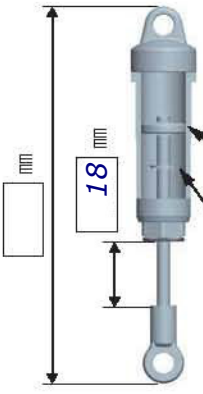

●X SHOCK
SPRING
○BLACK
● Orange
OIL
50
○#1 ○#2 ○#3 ○#4
● white
○ ●
mm x

REAR

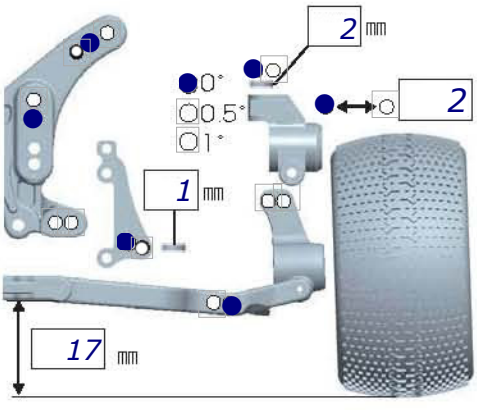

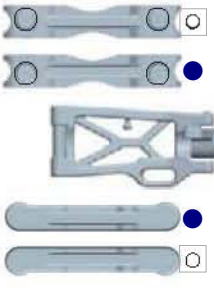

○S
●M
○L

○1.0 ○1.1
○1.2 ○1.3
●1.4

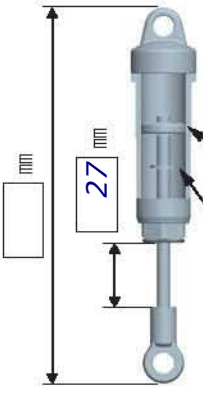

●X SHOCK
SPRING
○BLACK
○ green
OIL
30
○#1 ○#2 ○#3 ○#4
● white
● ○
mm x

DRIVE

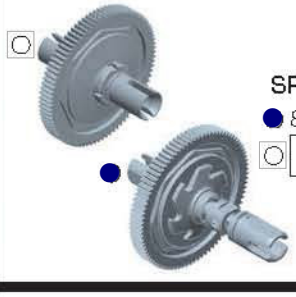

	SPUR	PINION
	●87T	●18T: 2.35
	○ ____ T	○ ____ T

MOTOR ➪ lrp 6.5 ○Bonded ○Sintered mm
BRUSHES ➪
BATTERY ➪ lrp 5800
ESC ● lrp flow
○

TIRE

FRONT
TIRE ➪ dboots
INSERTS ➪
WHEELS ➪

REAR
TIRE ➪ dboots
INSERTS ➪
WHEELS ➪

OTHER

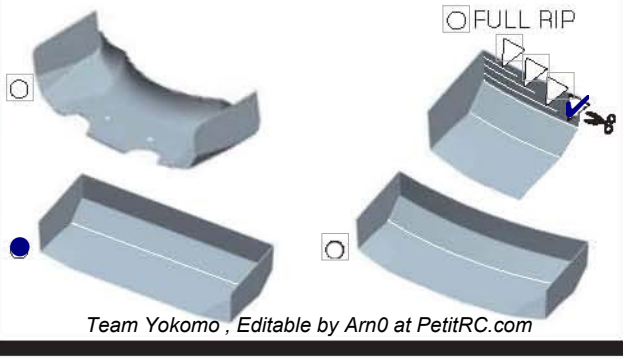

COMMENT

hard chasis
hard upper deck

Team Yokomo , Editable by Arn0 at PetitRC.com