B-MAX4 Ⅲ SETTING SHEET Ver.04

DRIVER	N.Matsukura	DATE	2014/06/22

CIRCUIT Indoorground RC Masters

● INDOOR ○ OUTDOOR
○ WET ○ DRY ○ DUSTY ● OTHER
○ LOW TRACTION ● MED TRACTION ○ HIGH TRACTION
● SMOOTH ○ BUMPY ○ BIUE GROOVE ○ ASTROTURF
● CARPET ○ WOOD

FRONT

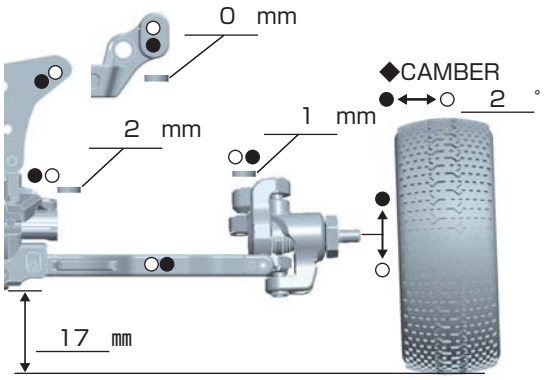

◆CAMBER ●↔○ 2 °

◆TOE ○IN ●OUT 0.5 °

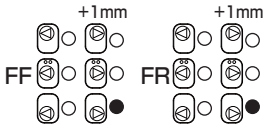

○1.0 ○1.1
○1.2 ○1.3
○1.4 ○1.5
○1.6 ○___

○BALL DIFF
●GEAR DIFF
#10,000

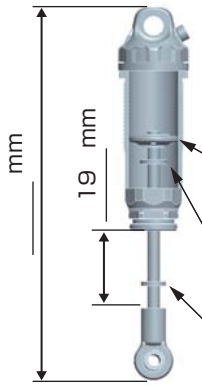

SPRING
○ORANGE
●YAS-650 PURPLE

OIL
#550

○#1 ○#2 ○#3
●1.6×2 (BM-S162)

1 mm x 3

mm x

REAR

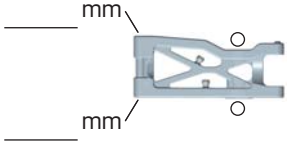

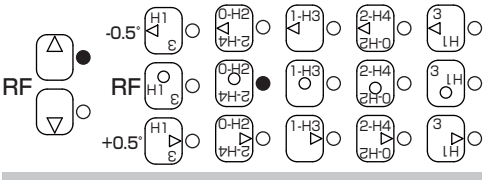

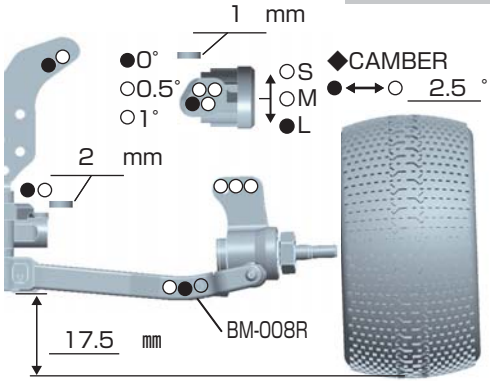

●0°
○0.5°
○1°

○S
○M
●L

◆CAMBER ●↔○ 2.5 °

○1.0 ○1.1
○1.2 ○1.3
○1.4 ○1.5
○1.6 ●1.8

○BALL DIFF
●GEAR DIFF
#10,000

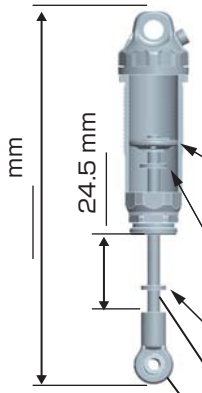

SPRING
○GREEN
●YAS-1025 ORANGE

OIL
400

○#1 ○#2 ○#3
○1.6×2 (BM-S162)

mm x

mm x

B2-S2S Front shock shaft

SD-008RC

DRIVE

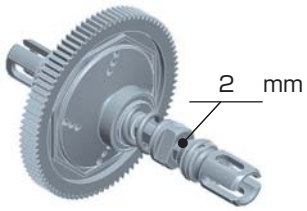

MOTOR	➪R.P. M series 5.0T	○Bonded ○Sintered ㎜
GEAR	➪ Spur 84T ／ Pinion 18 T : 2.35	
BATTERY	➪YOKOMO Short Size Lipo 4200mAh (YB-P242BN)	
ESC	● Racing Performer X Series	
	○BL-R3 ○	

Battery placement

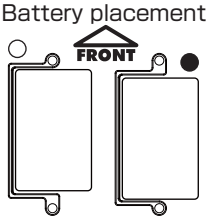

TIRE

FRONT		REAR	
TIRE	➪ Mini pin	TIRE	➪ Mini pin
INSERTS	➪ Blue	INSERTS	➪ Blue
WHEELS	➪ B4-821	WHEELS	➪ B4-827

OTHER

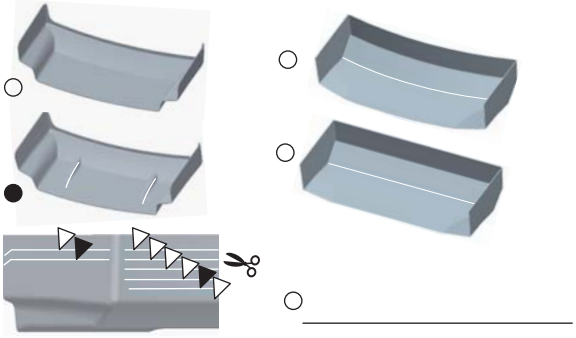

○ ○ ● ○ ○

COMMENT

B4-LWS Lightweight chassis conv.
B4-304MG Graphite center mount plate
B4-TBS Titanium turnbuckle set
B4-415R00 Aluminum rear hub career 0°
B4-TSS Titanium screw set
B2-S40 Shock bottom cap (with stepped collor)
B4-200SS Graphite center link support
B4-303A Aluminum input shaft
B4-CB68A Aluminum center bone 68mm
B4-CB76A Aluminum center bone 76mm
ZS-GWBN GOKURAKU Off-Road Wing Narrow