B-MAX2 MR SETTING SHEET

Arn0

DRIVER *Ronald Volker* | DATE *2014/01/19*

CIRCUIT *EOS Rd2 - Berlin*

● INDOOR ○ OUTDOOR
○ WET ○ DRY ○ DUSTY ● SMOOTH ○ BUMPY ○ OTHER
○ LOW TRACTION ● MED TRACTION ○ HIGH TRACTION
○ CLAY ○ GRASS ○ BLUE GROOVE ○ ASTROTURF ○ DIRT ● CARPET ✓ WOOD

FRONT

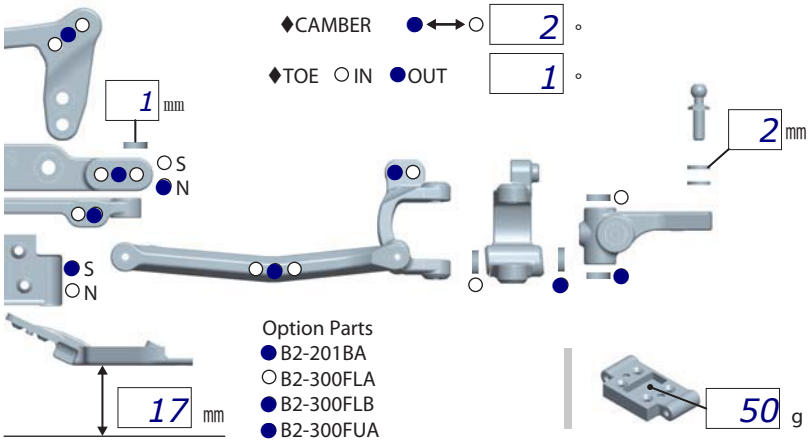

♦CAMBER ●←→○ 2 °

♦TOE ○ IN ● OUT 1 °

Option Parts
● B2-201BA
○ B2-300FLA
● B2-300FLB
● B2-300FUA

50 g

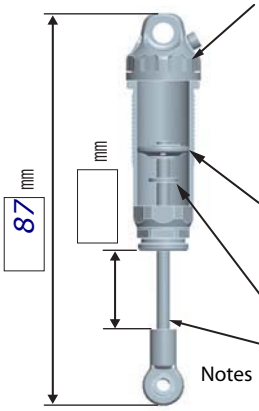

○ B2-S812R ● B2-S812A

SPRING
● BLUE
○

OIL *Yokomo 600*

PRELOAD
○ #1 ○ #2 ○ #3 ○ #4
● *2x1.6 (BM-S162)*

0 mm x

0 mm x

Notes

REAR

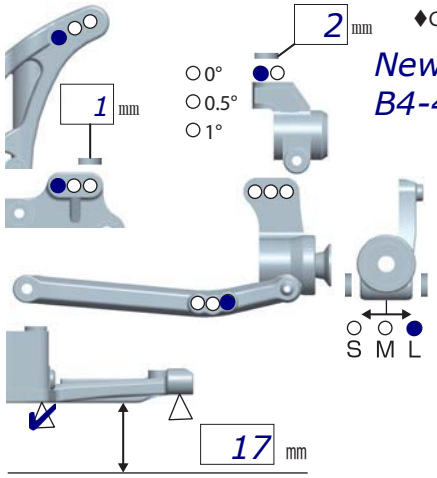

♦CAMBER ●←→○ 2 °

New Rear Hub fliped
B4-415R05

● 3° ○ 3.5° ○ 4°

○ 0° ○ 1° ● 2°

0 g

○ mm

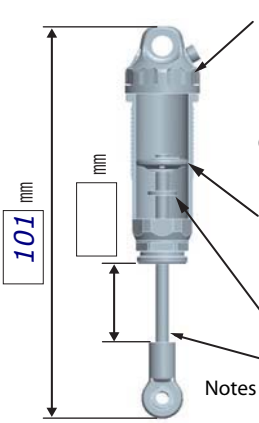

○ B2-S812R ● B2-S812A

SPRING
● BLUE
○

OIL *Yokomo 350*

PRELOAD
○ #1 ○ #2 ○ #3 ○ #4
● *2x1.6 (BM-S162)*

0.8 mm x 2

0 mm x

Notes

DRIVE

Midship ● | Rear ○

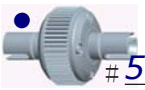

5000

○ Bonded
○ Sintered mm

MOTOR ♦ *LRP X20 7.5T*

GEAR ♦ Spur *80* T / Pinion *23* T : 2.6

BATTERY ♦ *LRP Saddle 5800-110C/55C*

ESC ○ NOSRAM / / /

○ BL-R3 ● *LRP Flow (3-1-0-0-0) v4.0 software*

Battery placement

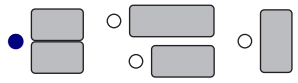

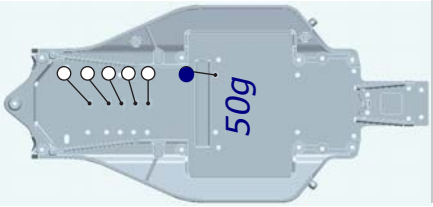

Option Parts
● B2-002MRA
● B2-118MA
○ B2-118RA
● B2-503GM
● B2-503IA
● B2-302MRH
● B2-018MRH

TIRE

FRONT		REAR	
TIRE	♦ *Pro-line Wedge (control tires)*	TIRE	♦ *Pro-line Pin Point (control tires)*
INSERTS	♦ *Pro-line (control inserts)*	INSERTS	♦ *Pro-line (control inserts)*
WHEELS	♦ *AE*	WHEELS	♦ *AE*

OTHER

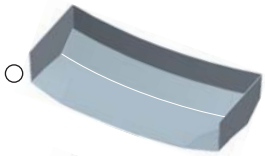

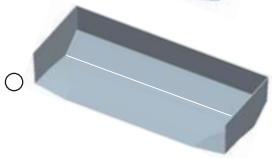

○ FULL RIP

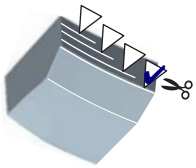

● *JConcept (0131)*

COMMENT

Editable: Arn0 at PetitRC.com