XRAY XB2 2017

1/10 LUXURY ELECTRIC OFF-ROAD CAR 2WD

INTRODUCTION

The XRAY XB2 is a modern, high-competition premium luxury racing 1/10 electric 2WD off-road buggy that is the epitome of high-performance and fine distinctive design. Your XB2 offers highest performance, responsive handling, and traditionally exceptional XRAY quality, engineering, and design. The superb craftsmanship and attention to detail are clearly evident everywhere on the XRAY XB2.

XB2 was designed around a no compromise platform; the attention to detail creates a low maintenance, extra long life electric buggy. The ultra-low center of gravity (CG) and optimized weight balance makes set-up, driving, and maintenance easy and quick.

The XRAY XB2 was created by blending highest-quality materials and excellent design. On high-speed flat tracks or bumpy tracks, whether driving for fun or racing to win, the XB2 delivers outstanding performance, speed, and precision handling.

We have made every effort to make these instructions as easy to understand as possible. However, if you have any difficulties, problems, or questions, please do not hesitate to contact the XRAY support team at info@teamxray.com. Also, please visit our web site at www.teamxray.com to find the latest updates, set-up information, option parts, and many other goodies. We pride ourselves on taking excellent care of our customers.

CUSTOMER SUPPORT

We have made every effort to make these instructions as easy to understand as possible. However, if you have any difficulties, problems, or questions, please do not hesitate to contact the XRAY support team at info@teamxray.com. Also, please visit our Web site at www.teamxray.com to find the latest updates, set-up information, option parts, and many other goodies. We pride ourselves on taking excellent care of our customers.

You can join thousands of XRAY fans and enthusiasts in our online community at:

www.teamxray.com

XRAY Europe
K Výstavisku 6992
91101 Trenčín
Slovakia, EUROPE
Phone: +421-32-7401100
Fax: +421-32-7401109
Email: info@teamxray.com

XRAY USA
RC America, 2030 Century Center Blvd #15
Irving, TX 75062
USA
Phone: (800) 519-7221 * (214) 744-2400
Fax: (214) 744-2401
Email: xray@rcamerica.com

Failure to follow these instructions will be considered as abuse and/or neglect.

SAFETY PRECAUTIONS

Contains:
LEAD (CAS 7439-92-1) ANTIMONY (CAS 7440-36-0)
WARNING: This product contains a chemical known to the state of California to cause cancer and birth defects or other reproductive harm.
CAUTION: CANCER HAZARD
Contains lead, a listed carcinogen. Lead is harmful if ingested. Wash thoroughly after using. DO NOT use product while eating, drinking or using tobacco products. May cause chronic effects to gastrointestinal tract, CNS, kidneys, and blood. MAY CAUSE BIRTH DEFECTS.

When building, using and/or operating this model always wear protective glasses and gloves.

Take appropriate safety precautions prior to operating this model. You are responsible for this model's assembly and safe operation! Please read the instruction manual before building and operating this model and follow all safety precautions. Always keep the instruction manual at hand for quick reference, even after completing the assembly. Use only genuine and original authentic XRAY parts for maximum performance. Using any third party parts on this model will void guaranty immediately.

Improper operation may cause personal and/or property damage. XRAY and its distributors have no control over damage resulting from shipping, improper construction, or improper usage. XRAY assumes and accepts no responsibility for personal and/or property damages resulting from the use of improper building materials, equipment and operations. By purchasing any item produced by XRAY, the buyer expressly warrants that he/she is in compliance with all applicable federal, state and local laws and regulation regarding the purchase, ownership and use of the item. The buyer expressly agrees to indemnify and hold harmless XRAY for all claims resulting directly or indirectly from the purchase, ownership or use of the product. By the act of assembling or operating this product, the user accepts all resulting liability. If the buyer is not prepared to accept this liability, then he/she should return this kit in new, unassembled, and unused condition to the place of purchase.

IMPORTANT NOTES – GENERAL

- This product is not suitable for children under 16 years of age without the direct supervision of a responsible and knowledgeable adult.
- Carefully read all manufacturers warnings and cautions for any parts used in the construction and use of your model.
- Assemble this kit only in places away from the reach of very small children.
- First-time builders and users should seek advice from people who have building experience in order to assemble the model correctly and to allow the model to reach its performance potential.
- Exercise care when using tools and sharp instruments.
- Take care when building, as some parts may have sharp edges.
- Keep small parts out of reach of small children. Children must not be allowed to put any parts in their mouth, or pull vinyl bag over their head.
- Read and follow instructions supplied with paints and/or cement, if used (not included in kit).
- Immediately after using your model, do NOT touch equipment on the model such as the motor and speed controller, because they generate high temperatures. You may seriously burn yourself seriously touching them.
- Follow the operating instructions for the radio equipment at all times.
- Do not put fingers or any objects inside rotating and moving parts, as this may cause damage or serious injury as your finger, hair, clothes, etc. may get caught.
- Be sure that your operating frequency is clear before turning on or running your model, and never share the same frequency with somebody else at the same time. Ensure that others are aware of the operating frequency you are using and when you are using it.
- Use a transmitter designed for ground use with RC cars. Make sure that no one else is using the same frequency as yours in your operating area. Using the same frequency at the same time, whether it is driving, flying or sailing, can cause loss of control of the RC model, resulting in a serious accident.
- Always turn on your transmitter before you turn on the receiver in the car. Always turn off the receiver before turning your transmitter off.
- Keep the wheels of the model off the ground when checking the operation of the radio equipment.
- Disconnect the battery pack before storing your model.
- When learning to operate your model, go to an area that has no obstacles that can damage your model if your model suffers a collision.
- Remove any sand, mud, dirt, grass or water before putting your model away.
- If the model behaves strangely, immediately stop the model, check and clear the problem.
- To prevent any serious personal injury and/or damage to property, be responsible when operating all remote controlled models.
- The model car is not intended for use on public places and roads or areas where its operation can conflict with or disrupt pedestrian or vehicular traffic.
- Because the model car is controlled by radio, it is subject to radio interference from many sources that are beyond your control. Since radio interference can cause momentary loss of control, always allow a safety margin in all directions around the model in order to prevent collisions.
- Do not use your model:
  - Near real cars, animals, or people that are unaware that an RC car is being driven.
  - In places where children and people gather
  - In residential districts and parks
  - In limited indoor spaces
  - In wet conditions
  - In the street
  - In areas where loud noises can disturb others, such as hospitals and residential areas.
  - At night or anytime your line of sight to the model may be obstructed or impaired in any way.

To prevent any serious personal injury and/or damage to property, please be responsible when operating all remote controlled models.

IMPORTANT NOTES – ELECTRICAL

- Insulate any exposed electrical wiring (using heat shrink tubing or electrical tape) to prevent dangerous short circuits. Take maximum care in wiring, connecting and insulating cables. Make sure cables are always connected securely. Check connectors for if they become loose. And if so, reconnect them securely. Never use R/C models with damaged wires. A damaged wire is extremely dangerous, and can cause short-circuits resulting in fire. Please have wires repaired at your local hobby shop.
- Low battery power will result in loss of control. Loss of control can occur due to a weak battery in either the transmitter or the receiver. Weak running battery may also result in an out of control car if your car's receiver power is supplied by the running battery. Stop operation immediately if the car starts to slow down.
- When not using RC model, always disconnect and remove battery.
- Do not disassemble battery or cut battery cables. If the running battery short-circuits, approximately 300W of electricity can be discharged, leading to fire or burns. Never disassemble battery or cut battery cables.
- Use a recommended charger for the receiver and transmitter batteries and follow the instructions correctly. Over-charging, incorrect charging, or using inferior chargers can cause the batteries to become dangerously hot. Recharge battery when necessary. Continual recharging may damage battery and, in the worst case, could build up heat leading to fire. If battery becomes extremely hot during recharging, please ask your local hobby shop for check and/or repair and/or replacement.
- Regularly check the charger for potential hazards such as damage to the cable, plug, casing or other defects. Ensure that any damage is rectified before using the charger again. Modifying the charger may cause short-circuit or overcharging leading to a serious accident. Therefore do not modify the charger.
- Always unplug charger when recharging is finished.
- Do not recharge battery while battery is still warm. After use, battery retains heat. Wait until it cools down before charging.
- Do not allow any metal part to short circuit the receiver batteries or other electrical/electronic device on the model.
- Immediately stop running if your RC model gets wet as may cause short circuit.
- Please dispose of batteries responsibly. Never put batteries into fire.

R/C & BUILDING TIPS

- Make sure all fasteners are properly tightened. Check them periodically.
- Make sure that chassis screws do not protrude from the chassis.
- For the best performance, it is very important that great care is taken to ensure the free movement of all parts.
- Clean all ball-bearings so they move very easily and freely.
- Tap or pre-thread the plastic parts when threading screws.
- Self-tapping screws cut threads into the parts when being tightened. Do not use excessive force when tightening the self-tapping screws because you may strip out the thread in the plastic. We recommended you stop tightening a screw when you feel some resistance.
- Ask your local hobby shop for any advice.

Please support your local hobby shop. We at XRAY Model Racing Cars support all local hobby dealers. Therefore we ask you, if at all possible, to purchase XRAY products at your hobby dealer and give them your support like we do. If you have difficulty finding XRAY products, please check out www.teamxray.com to get advice, or contact us via email at info@teamxray.com, or contact the XRAY distributor in your country.

WARRANTY

XRAY guarantees this model kit to be free from defects in both material and workmanship within 30 days of purchase. The total monetary value under warranty will in no case exceed the cost of the original kit purchased. This warranty does not cover any components damaged by use or modification or as a result of wear. Part or parts missing from this kit must be reported within 30 days of purchase. No part or parts will be sent under warranty without proof of purchase. Should you find a defective or missing part, contact the local distributor. Service and customer support will be provided through local hobby store where you have purchased the kit, therefore make sure to purchase any XRAY products at your local hobby store. This model racing car is considered to be a high-performance racing vehicle. As such this vehicle will be used in an extreme range of conditions and situations, all which may cause premature wear or failure of any component. XRAY has no control over usage of vehicles once they leave the dealer, therefore XRAY can only offer warranty against all manufacturer's defects in materials, workmanship, and assembly at point of sale and before use. No warranties are expressed or implied that cover damage caused by what is considered normal use, or cover or imply how long any model cars' components or electronic components will last before requiring replacement.

Due to the high performance level of this model car you will need to periodically maintain and replace consumable components. Any and all warranty coverage will not cover replacement of any part or component damaged by neglect, abuse, or improper or unreasonable use. This includes but is not limited to damage from crashing, chemical and/or water damage, excessive moisture, improper or no maintenance, or user modifications which compromise the integrity of components. Warranty will not cover components that are considered consumable on RC vehicles. XRAY does not pay nor refund shipping on any component sent to XRAY or its distributors for warranty. XRAY reserves the right to make the final determination of the warranty status of any component or part.

Limitations of Liability

XRAY makes no other warranties expressed or implied. XRAY shall not be liable for any loss, injury or damages, whether direct, indirect, special, incidental, or consequential, arising from the use, misuse, or abuse of this product and/or any product or accessory required to operate this product. In no case shall XRAY's liability excess the monetary value of this product.

Take adequate safety precautions prior to operating this model. You are responsible for this model's assembly and safe operation.

Disregard of the any of the above cautions may lead to accidents, personal injury, or property damage. XRAY MODEL RACING CARS assumes no responsibility for any injury, damage, or misuse of this product during assembly or operation, nor any addictions that may arise from the use of this product.

QUALITY CERTIFICATE

XRAY MODEL RACING CARS uses only the highest quality materials, the best compounds for molded parts and the most sophisticated manufacturing processes of TQM (Total Quality Management). We guarantee that all parts of a newly-purchased kit are manufactured with the highest regard to quality. However, due to the many factors inherent in model racecar competition, we cannot guarantee any parts once you start racing the car. Products which have been worn out, abused, neglected or improperly operated will not be covered under warranty.
We wish you enjoyment of this high-quality and high-performance RC car and wish you best success on the track!

In line with our policy of continuous product development, the exact specifications of the kit may vary. In the unlikely event of any problems with your new kit, you should contact the model shop where you purchased it, quoting the part number.

SYMBOLS USED

Part bags used	Assemble in the specified order	Assemble left and right sides the same way	Pay attention here	Assemble as many times as specified (here twice)	Apply threadlock	Apply CA glue	Apply oil
Scale	Apply grease	Optional parts	Ensure smooth non-binding movement	Tighten screw gently	Completed assembly	Detail	Apply cleaner

TOOLS REQUIRED

Scissors (HUDY #188990)

Special Tool for turnbuckles, nuts (HUDY #181090)

Turnbuckle Wrench 3mm (HUDY #181030)

Side Cutters (HUDY #189010)

Pocket Hobby Knife (HUDY #188981)

Combination Pliers (HUDY #189020)

Reamer (HUDY #107600) or (HUDY #107601)

Tweezer

HUDY TOOLS:

Allen 1.5mm

Allen 2.0mm

Socket 5.5mm

Socket 7.0mm

Arm Reamer 3.0mm

EQUIPMENT INCLUDED

HUDY Premium Silicone Oils

Oil 400cSt (#106340)

Oil 450cSt (#106345)

Graphite Grease (HUDY #106210)

NOT INCLUDED

Follow Set-Up Book

To ensure that you always have access to the most up-to-date version of the Set-up Book you can download the HUDY Set-up Book from their web site at [www.hudy.net] By offering this online version instead of including a hardcopy printed version in kits, you will always be assured of having the most current updated version.

SAMPLE OF OPTIONAL PARTS	
#32XXXX	OPTION 1
#32XXXX	OPTION 2
#32XXXX	INCLUDED
#32XXXX	OPTION 3

XRAY offers wide range of optional tuning parts which are listed in a table like this. Please refer to the exploded view of each main section to verify which part is included in the kit while all other parts are available only as an optional part and must be purchased separately.

EQUIPMENT REQUIRED

Transmitter

Receiver

Steering Servo

Electric Motor & Pinion Gear with Setscrew

Bearing Oil (HUDY #106230)

CA glue

Speed Controller

LiPo Battery

Lexan™ Paint

Battery Charger

Double-sided Tape

Tires & Inserts

TIP DRIVE SHAFT PIN SERVICING

To enjoy the longest possible lifespan of the drive shafts and diff outdrives, it is extremely important to properly service the drive shaft pins.
Inspect the pins after every 3 hours of runtime. If the pins show any wear, replace them with new pins.

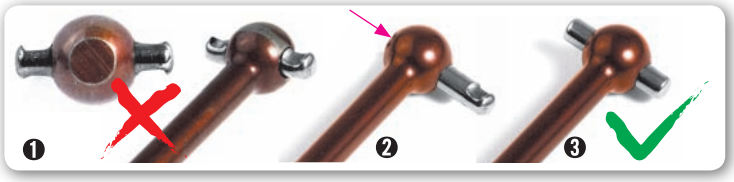

Do not use drive shafts when the pins are worn.

Press out the worn pins.

Press in new pins and regularly inspect for wear.

For quick & easy drive pin replacements use #106000 HUDY Drive Pin Replacement Tool.

To replace the worn pins use only premium HUDY drive pins #106051.

1. DIFFERENTIAL

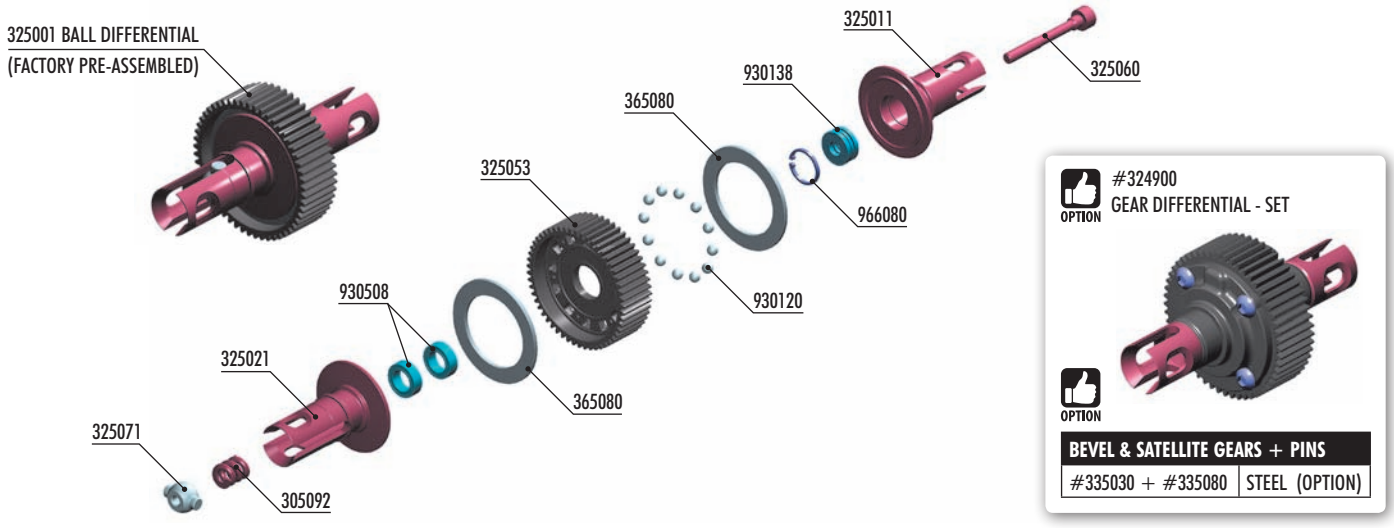

BAG 01

30 5092	BALL DIFFERENTIAL SPRING	32 5071	ALU BALL DIFFERENTIAL NUT
32 5001	BALL ADJUSTABLE DIFFERENTIAL XH - SET - HUDY SPRING STEEL™	36 5080	DIFF WASHER 17 x 24.5 x 1 (2)
32 5011	BALL DIFF SHORT OUTPUT SHAFT XH - HUDY SPRING STEEL™	93 0120	CARBIDE BALL 2.4MM FOR BALL DIFF (12)
32 5021	BALL DIFF LONG OUTPUT SHAFT XH - HUDY SPRING STEEL™	93 0138	CARBIDE BALL-BEARING AXIAL F3-8 3x8x3.5 - V2
32 5053	COMPOSITE BALL DIFFERENTIAL GEAR 53T	93 0508	BALL-BEARING 5x8x2.5 (2)
32 5060	SCREW FOR BALL DIFF ADJUSTMENT - SPRING STEEL™	96 6080	CH-CLIP 8 (10)

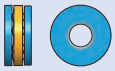

930138
BA 3x8x3.5

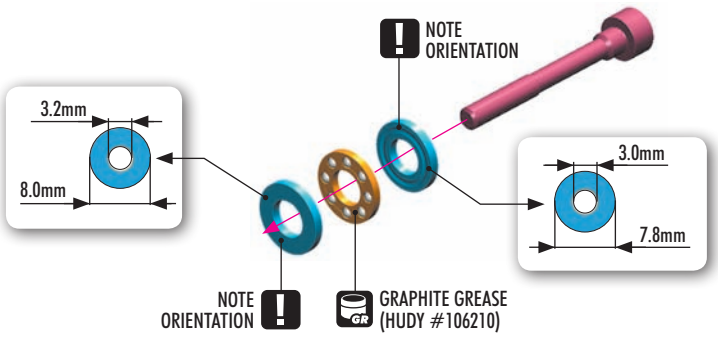

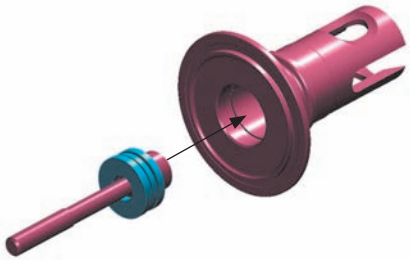

966080
C 8

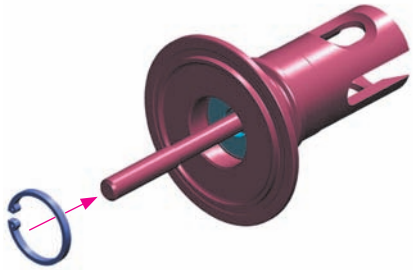

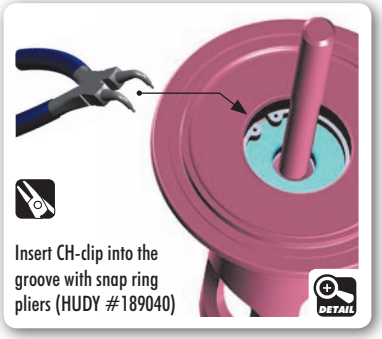

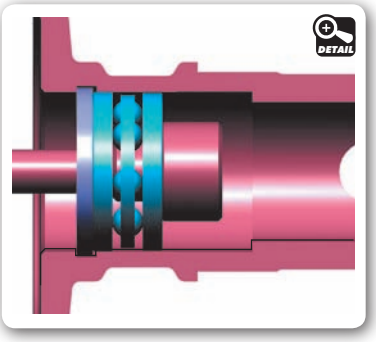

930508
BB 5x8x2.5

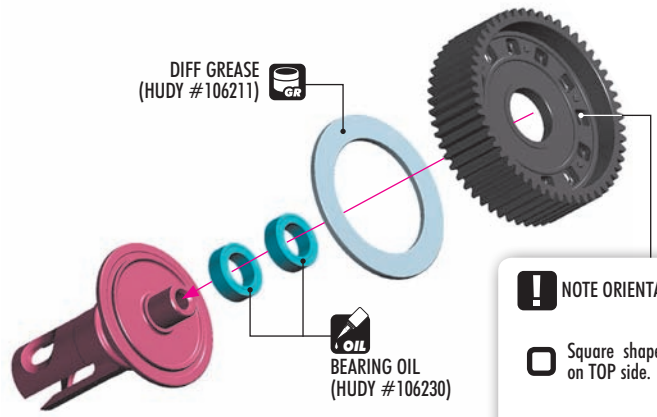

NOTE ORIENTATION

Square shape orientation on TOP side.

Round shape orientation on BOTTOM side.

CUTAWAY VIEW

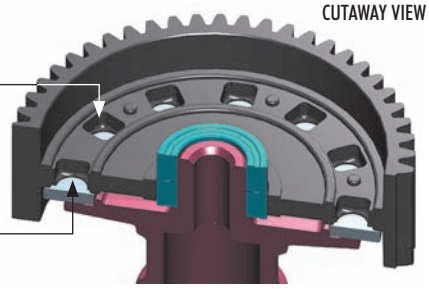

930120
B 2.4

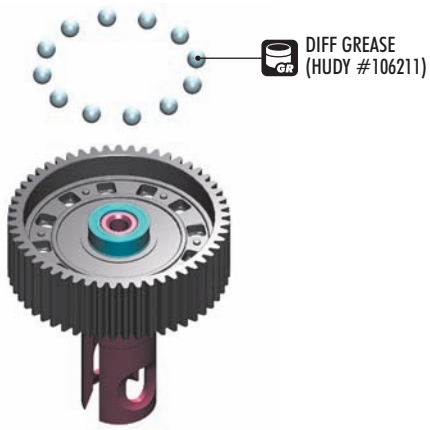

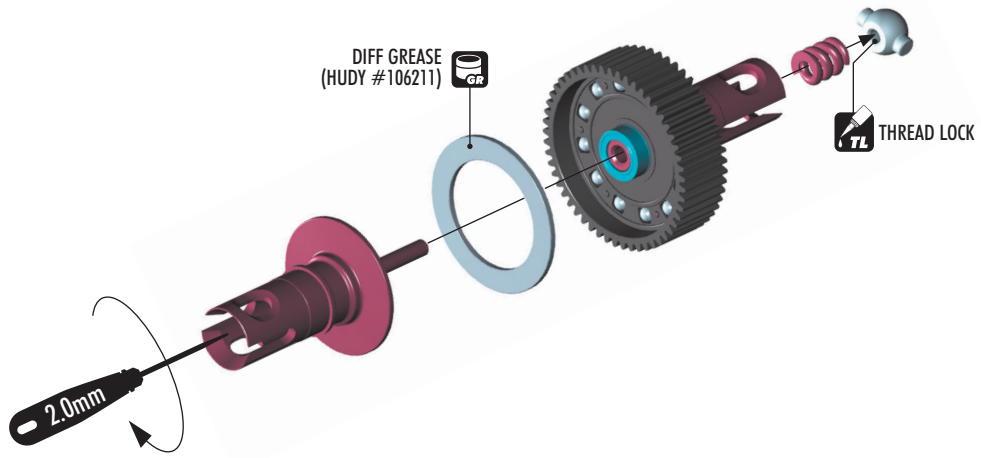

IMPORTANT: When you build the differential, do not tighten it fully initially; the differential needs to be broken in properly. When you build the diff tighten it very gently. When you put the diff in the car and complete the assembly, run the car for a few minutes, tighten the diff a little bit, and then recheck the diff. Repeat this process several times until you have the diff tightened to the point you want it. Final adjustments should ALWAYS be made with the diff in the car and on the track.

To access the diff when it is installed in the car, you need to remove the camber linkage on the side from which the diff screw is installed. This will detach the suspension. Then use a 2mm hex wrench to adjust the diff.

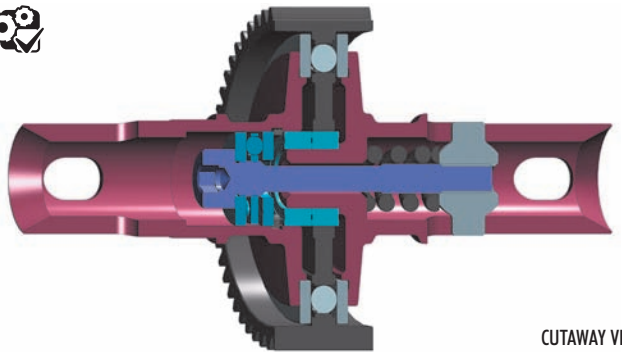

CUTAWAY VIEW

BALL DIFF BREAK-IN & SET-UP INFO

The differential is factory pre-assembled including all greases, but is NOT ready to race immediately.

BEFORE RACING, follow these steps to properly break in the differential.

INITIAL BALL DIFFERENTIAL BREAK-IN

❶ Loosen the adjustment screw ¼ turn (90° CCW).

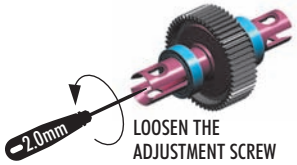

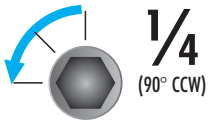

❷ Rest the car on a flat surface (such as a table) and hold the left rear wheel securely in your hand. Apply 15% throttle to let the right rear wheel spin freely off the ground. Do this for about 10-15 seconds. Release the throttle so the wheels do not spin.

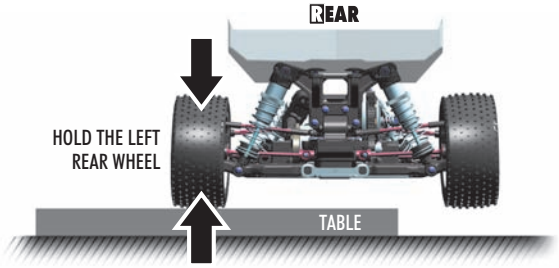

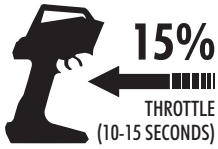

❸ Switch sides, and hold the right rear wheel securely in your hand. Again apply **15%** throttle to let the left rear wheel spin for 10-15 seconds. Release the throttle so the wheels do not spin.

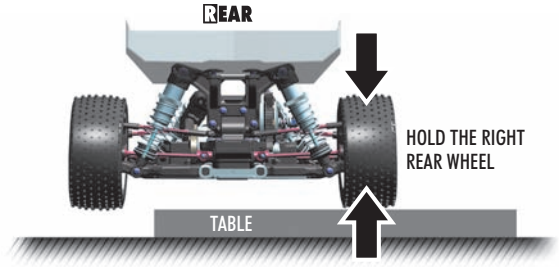

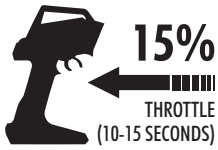

❹ Tighten the ball diff ⅛ turn (CW) with a 2mm hex wrench.

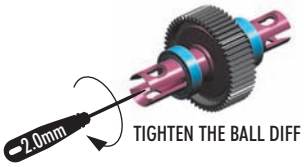

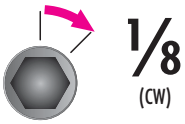

❺ Now repeat the above process again but this time apply **30%** throttle. Rest the vehicle on a flat surface (such as a table) and hold the left rear wheel securely in your hand. Apply **30%** throttle to let the right rear wheel spin freely off the ground. Do this for about 10-15 seconds. Release the throttle so the wheels do not spin.

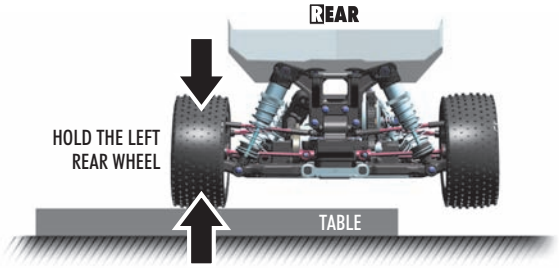

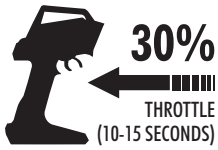

❻ Switch sides, and hold the right rear wheel securely in your hand. Again apply **30%** throttle to let the left rear wheel spin for 10-15 seconds. Release the throttle so the wheels do not spin.

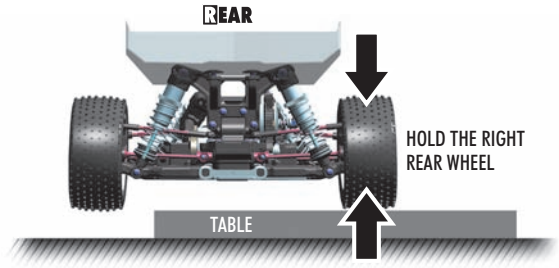

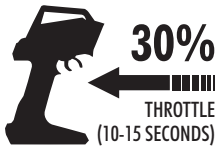

❼ Tighten the ball diff ⅛ turn (CW) with a 2mm hex wrench. This completes the INITIAL break-in process.

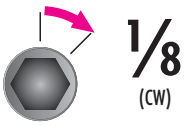

SLIPPER CLUTCH & BALL DIFFERENTIAL ADJUSTMENT

It is critical that the slipper clutch and ball diff tension be set so that the slipper clutch always slips **FIRST** before the ball diff. The ball diff should **NEVER** slip as this will damage diff balls and diff washers.

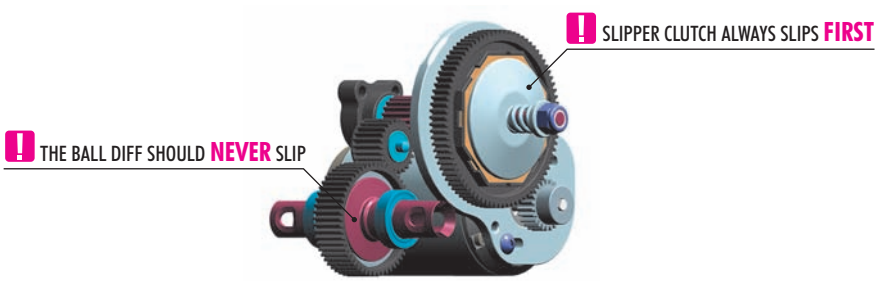

BEFORE 1ST RUN

Place the car on a flat table and hold both rear wheels. Apply short bursts of **100%** full throttle. The front suspension should extend fully, but the front wheels should NOT lift off the ground. If needed, tighten or loosen the slipper adjustment nut as required.

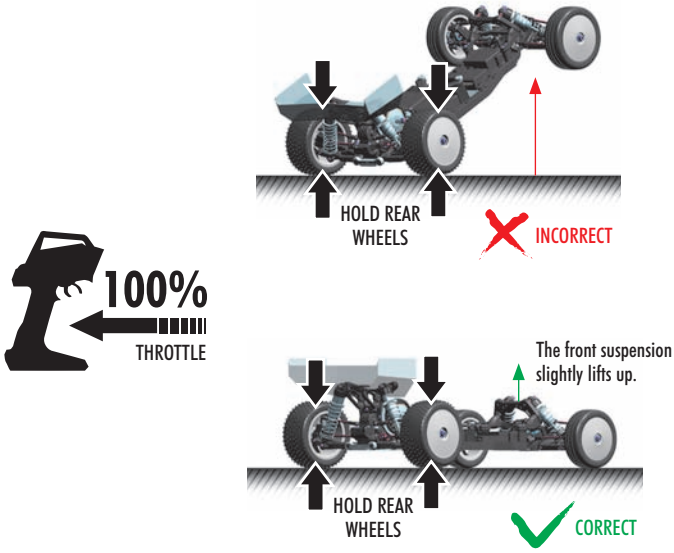

1ST RUN

IMPORTANT

During the first round listen to the car for metallic slipping sounds. If you hear metallic slipping sounds it means your differential is set too loose. Tighten the differential only ⅛ turn (CW) and recheck.

AFTER 1ST RUN

After the first run, check again for the proper slipper and ball diff adjustment with the same procedure. Place the car on a flat table and hold both rear wheels. Apply short bursts of **100%** full throttle. The front suspension should extend fully, but the front wheels should not lift off the ground. If needed, tighten or loosen the slipper adjustment nut as required.

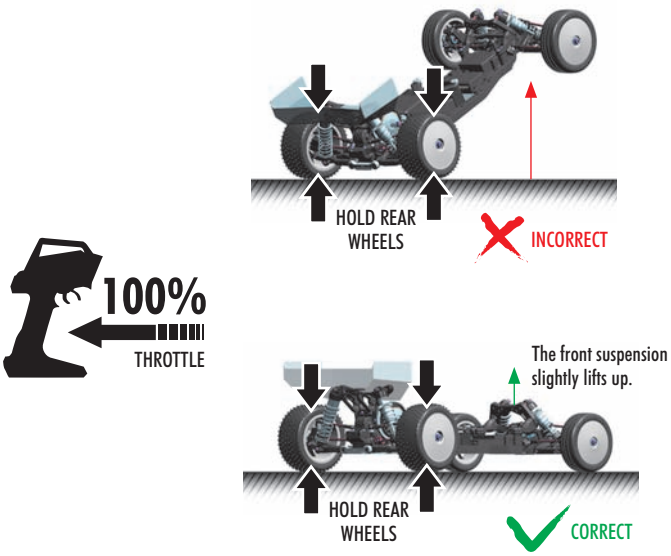

2. REAR TRANSMISSION

RIGHT MOTOR POSITION ASSEMBLY

For LEFT motor position assembly, see page 36.

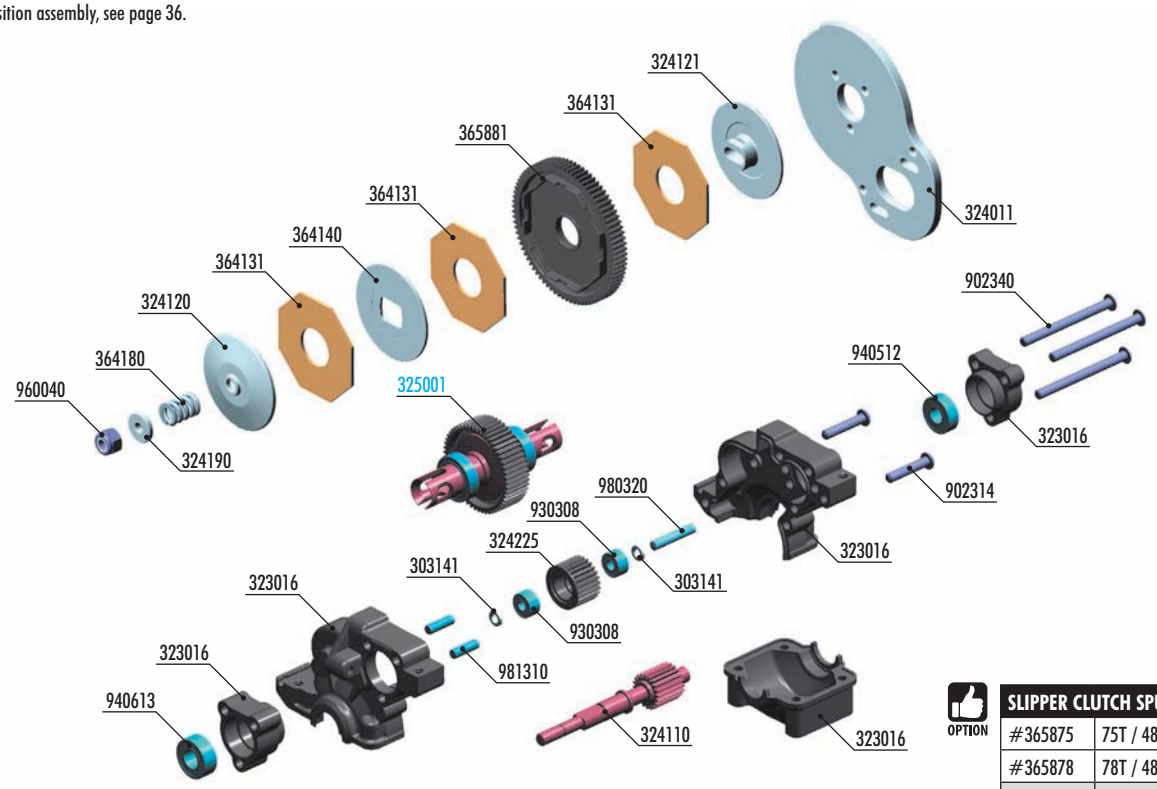

OPTION

SLIPPER CLUTCH SPUR GEARS		
#365875	75T / 48	(OPTION)
#365878	78T / 48	(OPTION)
#365881	81T / 48	(INCLUDED)
#365884	84T / 48	(OPTION)
#365887	87T / 48	(OPTION)

BAG 02

30 3141	ALU SHIM 3x5x1.0MM (10)
32 3016	COMPOSITE MID MOTOR GEAR BOX (3 GEARS) - NARROW - SET
32 4011	ALU MID & REAR MOTOR PLATE - SWISS 7075 T6 (3MM)
32 4110	ALU TOP SHAFT 20T - SWISS 7075 T6 - HARD COATED
32 4120	ALU 3-PAD SLIPPER CLUTCH PLATE - SWISS 7075 T6
32 4121	ALU 3-PAD SLIPPER CLUTCH PLATE WITH ADAPTER
32 4190	ALU 3-PAD SLIPPER CLUTCH SHIM
32 4225	COMPOSITE GEAR 25T - GRAPHITE
36 4131	SLIPPER CLUTCH PAD "SLS" - V2 (2)
36 4140	ALU 3-PAD SLIPPER CLUTCH PLATE DISC - 7075 T6
36 4180	SLIPPER CLUTCH SPRING C=30 - BLACK
36 5875	COMPOSITE 3-PAD SLIPPER CLUTCH SPUR GEAR 75T / 48 (OPTION)
36 5878	COMPOSITE 3-PAD SLIPPER CLUTCH SPUR GEAR 78T / 48 (OPTION)
36 5881	COMPOSITE 3-PAD SLIPPER CLUTCH SPUR GEAR 81T / 48
36 5884	COMPOSITE 3-PAD SLIPPER CLUTCH SPUR GEAR 84T / 48 (OPTION)
36 5887	COMPOSITE 3-PAD SLIPPER CLUTCH SPUR GEAR 87T / 48 (OPTION)
90 2314	HEX SCREW SH M3x14 (10)
90 2340	HEX SCREW SH M3x40 (10)
93 0308	BALL-BEARING 3x8x4 (2)
94 0512	HIGH-SPEED BALL-BEARING 5x12x4 RUBBER SEALED (2)
94 0613	HIGH-SPEED BALL-BEARING 6x13x5 RUBBER SEALED (2)
96 0040	NUT M4 (10)
98 0320	PIN 3x20 (10)
98 1310	PIN 3x10 (10)
32 5001	BALL ADJUSTABLE DIFFERENTIAL XH - SET - HUDY SPRING STEEL™

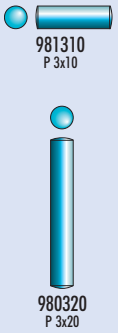

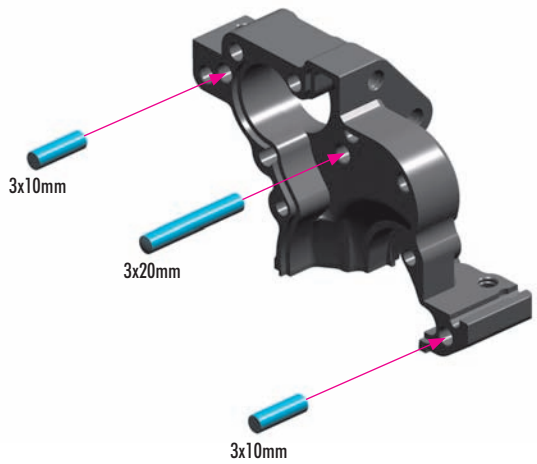

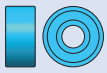
930308
BB 3x8x4


303141
SHIM 3x5x1

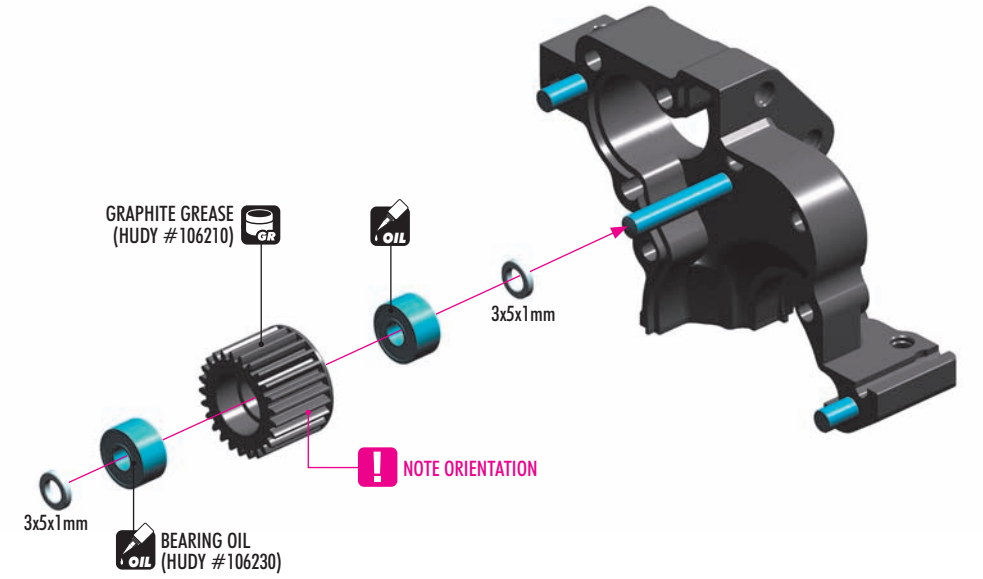

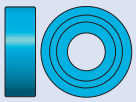
940512
BB 5x12x4

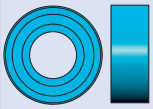
940613
BB 6x13x5


902340
SH M3x40

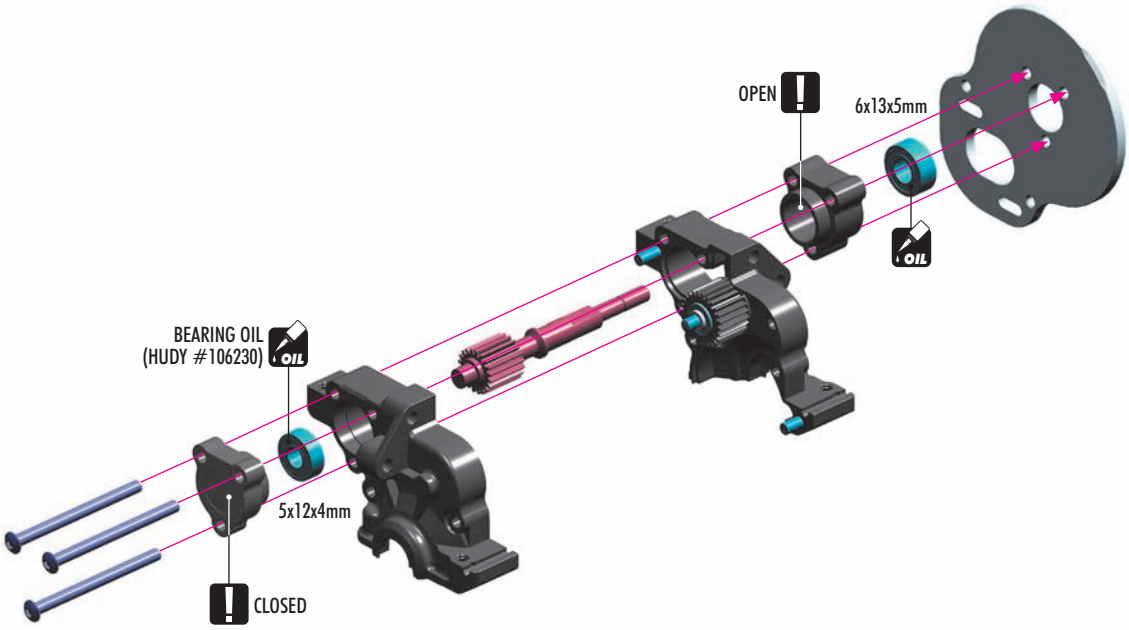

OPTION

SLIPPER CLUTCH SPUR GEARS		
#365875	75T / 48	(OPTION)
#365878	78T / 48	(OPTION)
#365881	81T / 48	(INCLUDED)
#365884	84T / 48	(OPTION)
#365887	87T / 48	(OPTION)

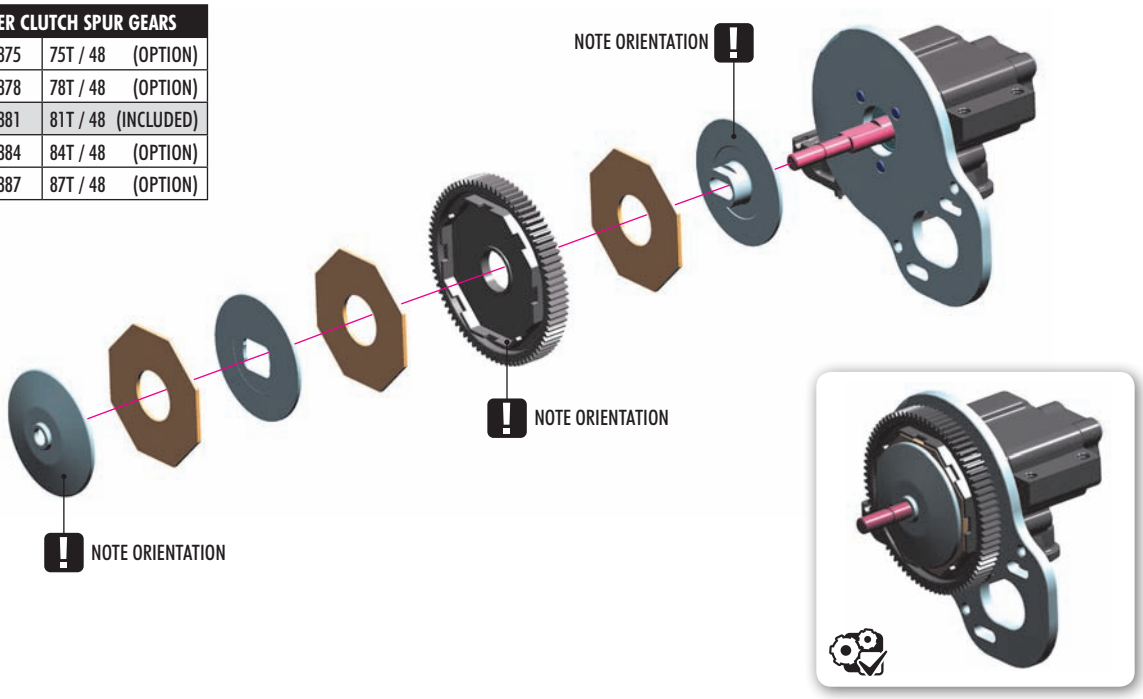

960040
N M4

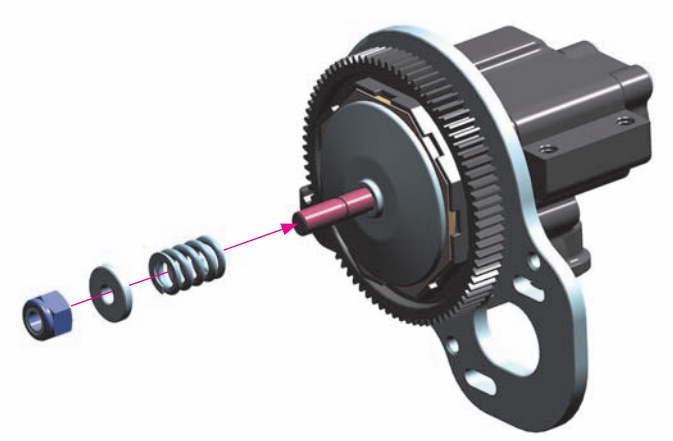

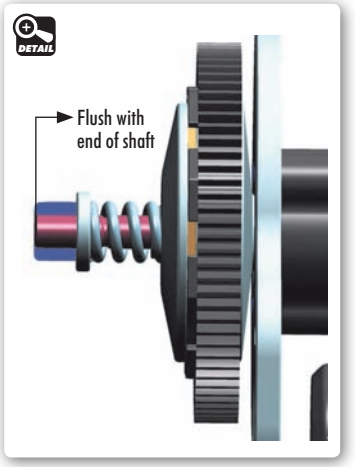

SET-UP BOOK
SLIPPER CLUTCH

902314
SH M3x14

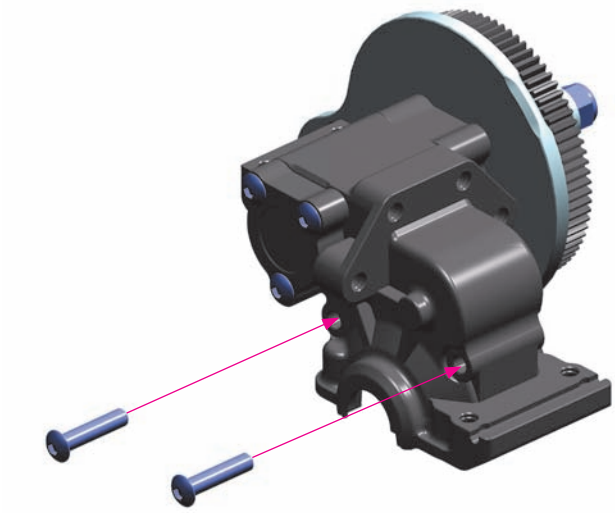

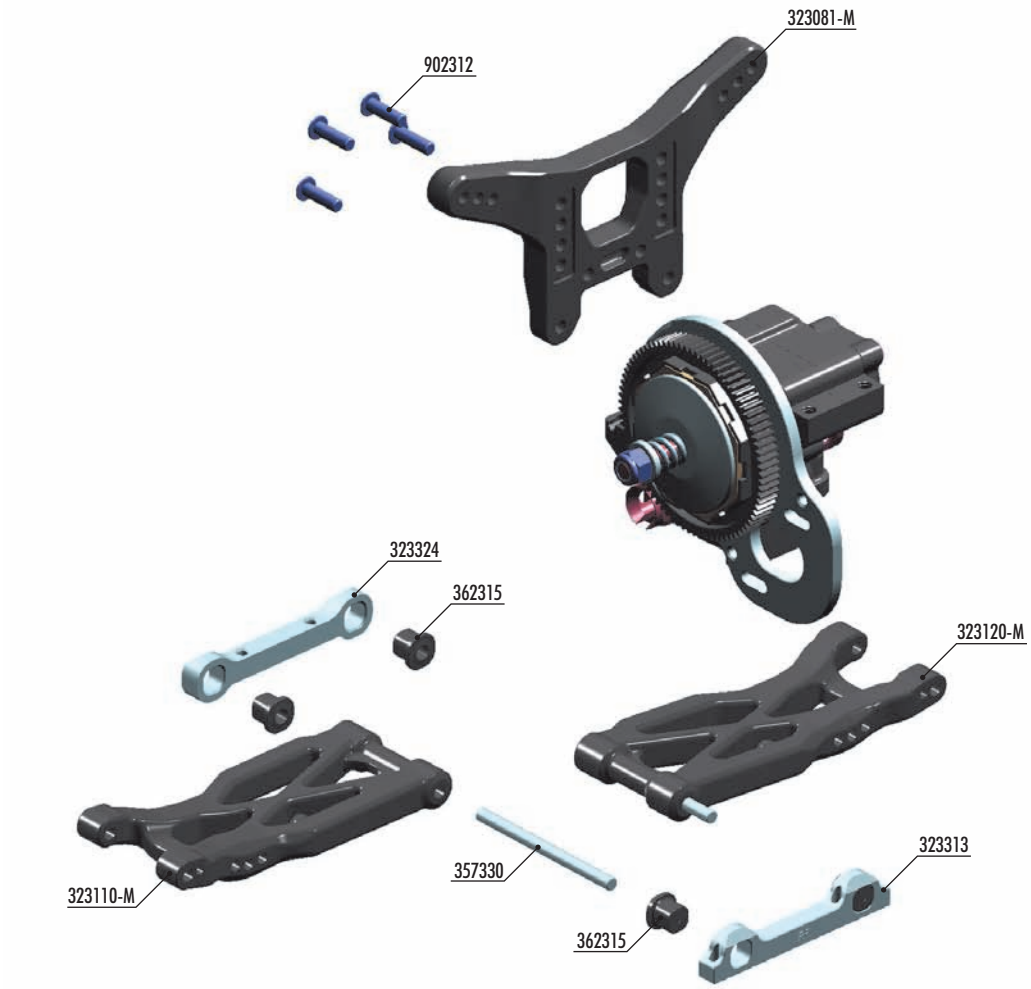

OPTION

NARROW SUSPENSION HOLDERS			
#323313	ALU	RF	INCLUDED
#323312	BRASS	RF	OPTION
#323323	BRASS	RR	OPTION
#323324	ALU	RR	INCLUDED

OPTION

REAR SHOCK TOWERS		
#323081-M	MEDIUM	INCLUDED
#323081-H	HARD	OPTION

OPTION

REAR SUSPENSION ARMS		
#323110-M	RIGHT - MEDIUM	INCLUDED
#323120-M	LEFT - MEDIUM	INCLUDED
#323110-H	RIGHT - HARD	OPTION
#323120-H	LEFT - HARD	OPTION
#323110-G	RIGHT - GRAPHITE	OPTION
#323120-G	LEFT - GRAPHITE	OPTION

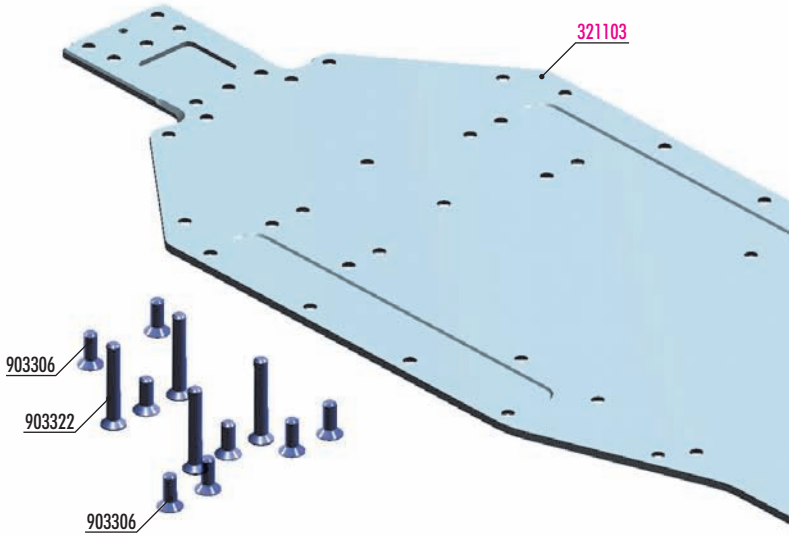

BAG 03

323081-M	COMPOSITE SHOCK TOWER REAR - MEDIUM
323081-H	COMPOSITE SHOCK TOWER REAR - HARD (OPTION)
32 3110-M	COMPOSITE SUSPENSION ARM REAR LOWER RIGHT - MEDIUM
32 3110-H	COMPOSITE SUSPENSION ARM REAR LOWER RIGHT - HARD (OPTION)
32 3110-G	COMPOSITE SUSP. ARM REAR LOWER RIGHT - GRAPHITE (OPTION)
32 3120-M	COMPOSITE SUSPENSION ARM REAR LOWER LEFT - MEDIUM
32 3120-H	COMPOSITE SUSPENSION ARM REAR LOWER LEFT - HARD (OPTION)
32 3120-G	COMPOSITE SUSP. ARM REAR LOWER LEFT - GRAPHITE (OPTION)
32 3313	ALU REAR LOWER SUSP. HOLDER - NARROW - FRONT - SWISS 7075 T6 (5MM)
32 3324	ALU REAR LOWER SUSP. HOLDER - NARROW - REAR - SWISS 7075 T6 (5MM)
35 7330	REAR LOWER OUTER PIVOT PIN (2)
36 2315	ECCENTRIC BUSHING SET (2)
90 2312	HEX SCREW SH M3x12 (10)
90 3306	HEX SCREW SFH M3x6 (10)
90 3322	HEX SCREW SFH M3x22 (10)
32 1103	ALU CHASSIS - FLEX - SWISS 7075 T6 (2MM)

903306
SFH M3x6

COMPOSITE ECCENTRIC BUSHINGS

1° 0.5° 0° 0.5° 1°

INITIAL SETTING

(TOE IN = 4° / ANTI-SQUAT = 2°)

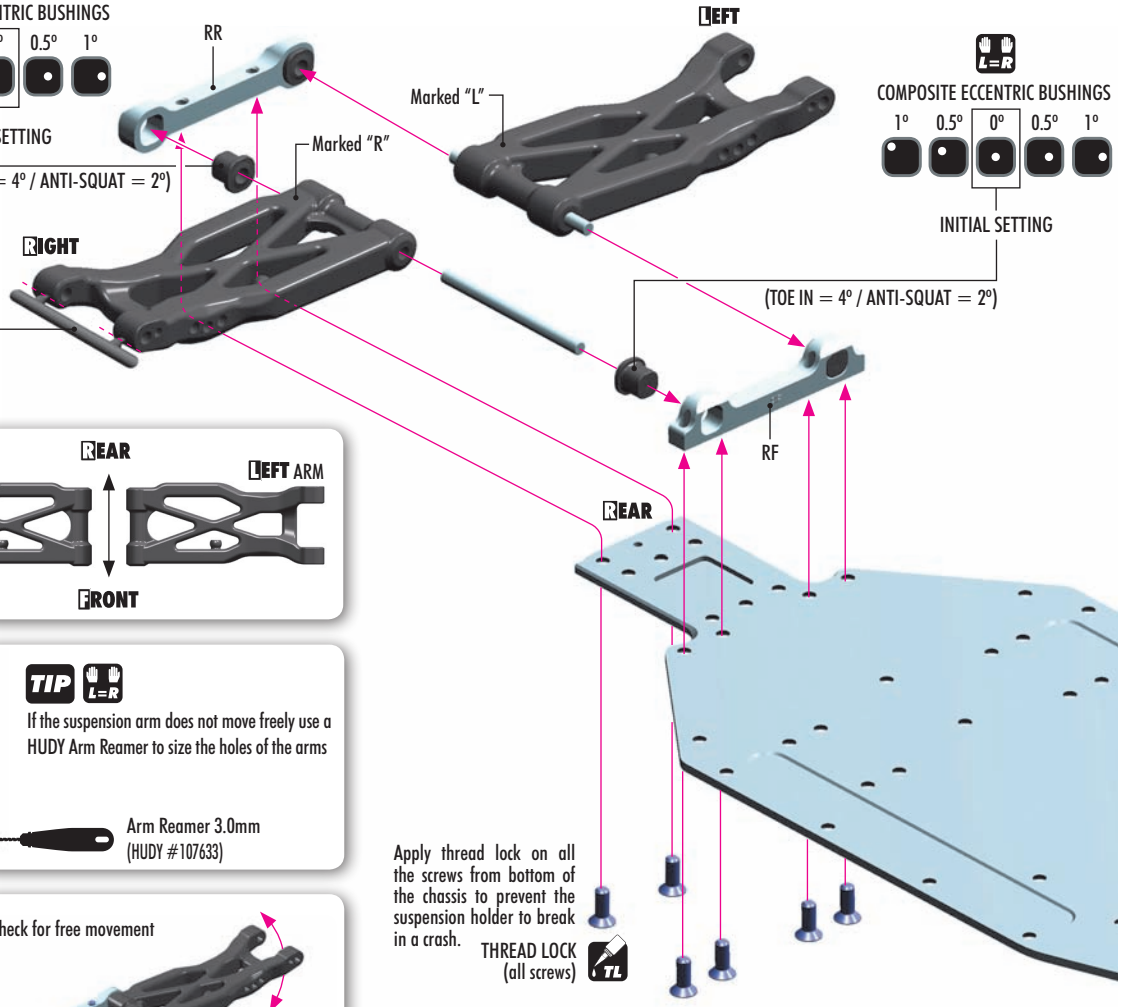

COMPOSITE ECCENTRIC BUSHINGS

1° 0.5° 0° 0.5° 1°

INITIAL SETTING

(TOE IN = 4° / ANTI-SQUAT = 2°)

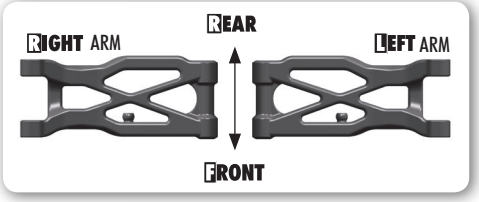

TIP

If the suspension arm does not move freely use a HUDY Arm Reamer to size the holes of the arms

Arm Reamer 3.0mm
(HUDY #107633)

Check for free movement

Apply thread lock on all the screws from bottom of the chassis to prevent the suspension holder to break in a crash.

THREAD LOCK
(all screws)

OPTION

REAR SUSPENSION ARMS		
#323110-M	RIGHT - MEDIUM	(INCLUDED)
#323120-M	LEFT - MEDIUM	(INCLUDED)
#323110-H	RIGHT - HARD	(OPTION)
#323120-H	LEFT - HARD	(OPTION)
#323110-G	RIGHT - GRAPHITE	(OPTION)
#323120-G	LEFT - GRAPHITE	(OPTION)

MEDIUM - For very-low & low traction
HARD - For medium & high traction
GRAPHITE - For high & very-high traction

All possible mounting alternatives of eccentric bushings

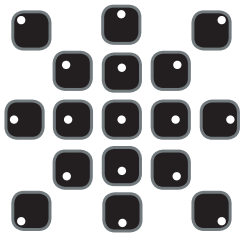

SET-UP BOOK

TOE-IN
ANTI-SQUAT
ROLL CENTER
TRACK-WIDTH

ECCENTRIC BUSHINGS HAVE TWO DIFFERENT OFFSETS FROM THE CENTER.

Middle position = 0.5° or 0.375mm from center.

Outer position = 1° or 0.75mm from center.

The XRAY rear alu lower suspension holders provide great range of adjustment for the rear suspension. Using different combinations of eccentric bushings, fine adjustment of rear anti-squat, rear toe-in, rear roll center, and rear track-width can be obtained. For more information about the influence of rear anti-squat, rear toe-in, rear roll center and rear track width on car handling, please refer to HUDY Set-up Book (#209100).

ANTI-SQUAT

RR	RF	(°)
		=2°
		=3°
		=1°
		=3°
		=2°
		=4°
		=1°
		=2°
		=0°

ROLL CENTER

RR	RF	(mm)
		=+0.75mm
		=0mm
		=-0.75mm

TRACK-WIDTH

RR	RF	(mm)
		=+1.5mm
		=0mm
		=-1.5mm

The track-width is directly influenced by the size of the wheels and tires used.

TOE-IN

RR	RF	(°)
		=4°
		=5°
		=3°
		=3°
		=4°
		=2°
		=5°
		=6°
		=4°

The tables describe the amounts of adjustment using the center and outside positions of the eccentric bushings. The middle position eccentric bushings allow for finer adjustment increments.

Example:

0(RR) - 0 (RF) = 2°

= 2°

0(RR) - 0.5 (RF) = 2.5°

= 2.5°

0(RR) - 1 (RF) = 3°

= 3°

902312
SH M3x12

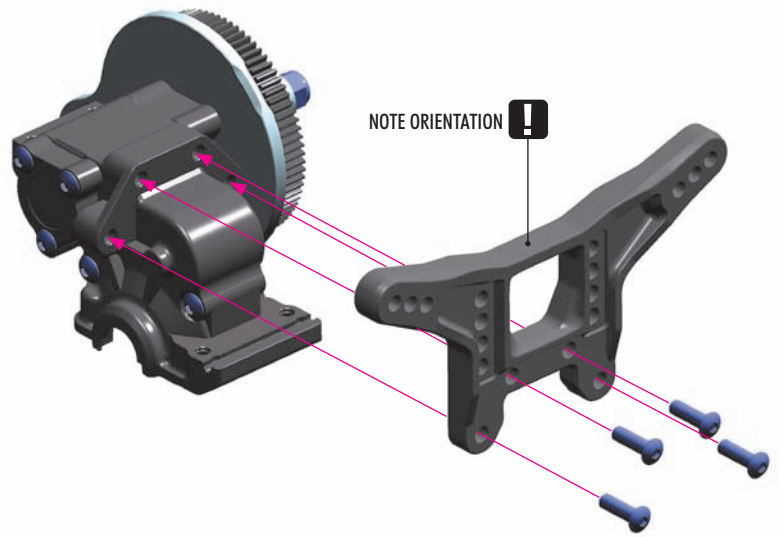

OPTION

REAR SHOCK TOWERS		
#323081-M	MEDIUM	(INCLUDED)
#323081-H	HARD	(OPTION)

MEDIUM - For very-low & low traction
HARD - For medium & high traction

903306
SFH M3x6

903322
SFH M3x22

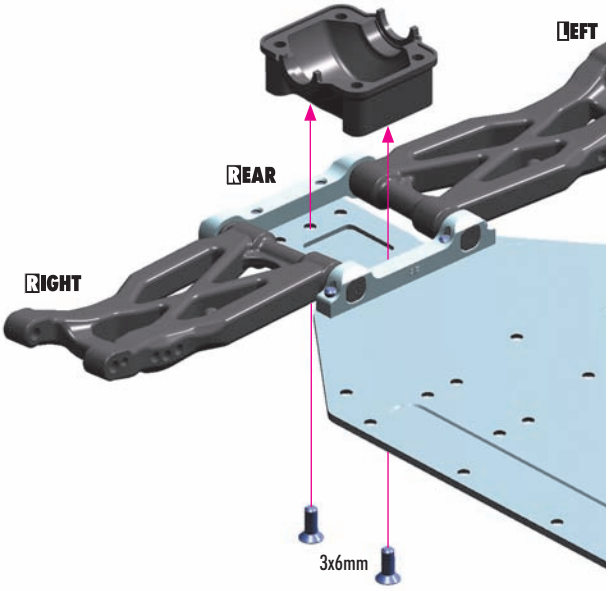

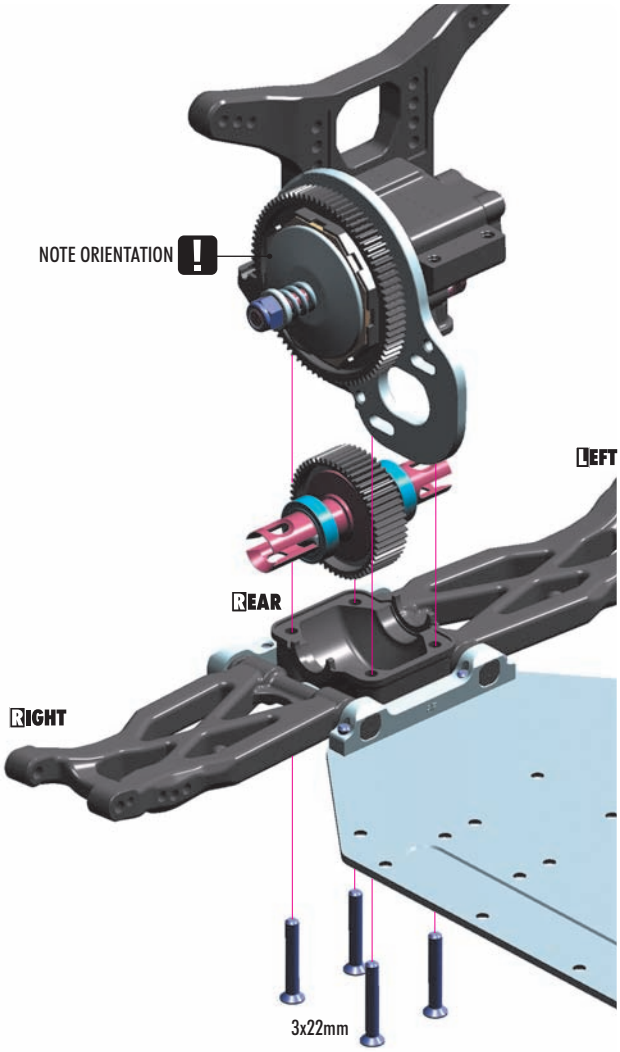

3. REAR DRIVETRAIN

OPTION

DRIVE SHAFT COLLAR		
#365470	COMPOSITE	(INCLUDED)
#365471-K	ALU - BLACK	(OPTION)
#365471-O	ALU - ORANGE	(OPTION)

OPTION

REAR UPRIGHTS		
#323350-M	MEDIUM	(INCLUDED)
#323350-H	HARD	(OPTION)
#323351	ALU	(OPTION)

OPTION

WHEEL HUBS 12MM		
#365357	+4.5mm	(INCLUDED)
#365359	+3.75mm - 5 slots	(OPTION)
#365358	+3.0mm - 4 slots	(OPTION)
#365357	+2.25mm - 3 slots	(OPTION)
#365356	+1.5mm - 2 slots	(OPTION)
#365355	+0.75mm - 1 slot	(OPTION)
#365353	0mm - 0 slots	(OPTION)
#365354	-0.75mm - Lightw.	(OPTION)

OPTION

DRIVE SHAFT		
#365320	STEEL	(INCLUDED)
#365300	ECS	(OPTION)

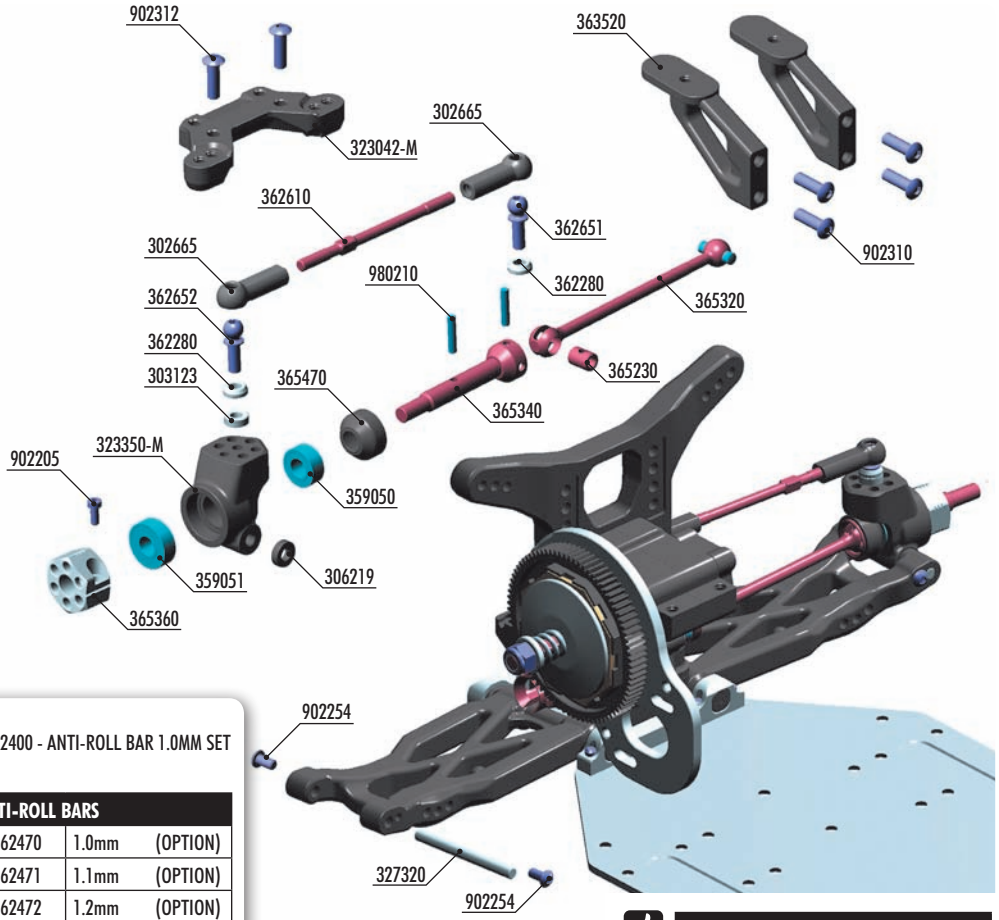

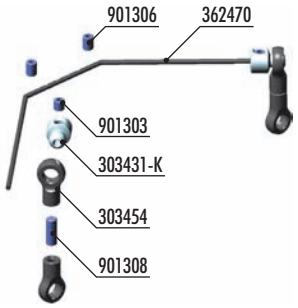

OPTION #362400 - ANTI-ROLL BAR 1.0MM SET

OPTION

ANTI-ROLL BARS		
#362470	1.0mm	(OPTION)
#362471	1.1mm	(OPTION)
#362472	1.2mm	(OPTION)

OPTION

REAR ROLL-CENTER HOLDER		
#323042-M	MEDIUM	(INCLUDED)
#323042-H	HARD	(OPTION)

BAG 03

30 2665	COMPOSITE BALL JOINT 4.9MM - CLOSED WITH HOLE (4)	36 2652	BALL END 4.9MM WITH THREAD 10MM (2)
30 3123	ALU SHIM 3x6x2.0MM (10)	36 3520	REAR WING POST - V2 (2)
30 3431-K	ALU 4.9MM BALL END - BLACK (2) (OPTION)	36 5230	DRIVE SHAFT COUPLING - HUDY SPRING STEEL™
30 3454	BALL JOINT 4.9MM - OPEN (4) (OPTION)	36 5300	ECS REAR DRIVE SHAFT 68MM - HUDY SPRING STEEL™ (OPTION)
30 6219	COMPOSITE SET OF SERVO SHIMS (4)	36 5320	REAR DRIVE SHAFT 67MM - HUDY SPRING STEEL™ - V4
32 3042-M	COMPOSITE REAR ROLL-CENTER HOLDER - DIRT EDITION - MEDIUM	36 5340	REAR DRIVE AXLE - HUDY SPRING STEEL™
32 3350-M	COMPOSITE UPRIGHT REAR - MEDIUM	36 5360	ALU WHEEL HUB 12MM - OFFSET "+4.5MM" (2)
32 3350-H	COMPOSITE UPRIGHT REAR - HARD (OPTION)	36 5470	COMPOSITE DRIVE SHAFT SAFETY COLLAR - V2 (3)
32 3351	ALU REAR UPRIGHT - SWISS 7075 T6 (OPTION)		
32 7320	REAR ARM PIVOT PIN (2)	90 1303	HEX SCREW SB M3x3 (10) (OPTION)
35 9050	BALL-BEARING 5x10x4 WITH GREASE (2)	90 1306	HEX SCREW SB M3x6 (10) (OPTION)
35 9051	BALL-BEARING 5x12x4 WITH GREASE (2)	90 1308	HEX SCREW SB M3x8 (10) (OPTION)
36 2280	ALU CONICAL SHIM 3x6x2.0MM (10)	90 2205	HEX SCREW SH M2x5 (10)
36 2470	ANTI-ROLL BAR 1.0 MM (OPTION)	90 2254	HEX SCREW SH M2.5x4 (10)
36 2471	ANTI-ROLL BAR 1.1 MM (OPTION)	90 2310	HEX SCREW SH M3x10 (10)
36 2472	ANTI-ROLL BAR 1.2 MM (OPTION)	90 2312	HEX SCREW SH M3x12 (10)
36 2610	ADJUSTABLE TURNBUCKLE 50MM M3 L/R - HUDY SPRING STEEL™ (2)	98 0210	PIN 2x9.8 (10)
36 2651	BALL END 4.9MM WITH THREAD 8MM (2)		

980210
P 2x10

2x L=R

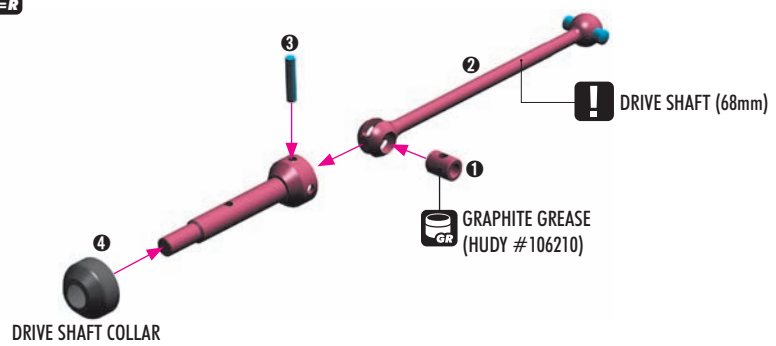

OPTION

DRIVE SHAFT COLLAR		
#365470	COMPOSITE	(INCLUDED)
#365471-K	ALU - BLACK	(OPTION)
#365471-O	ALU - ORANGE	(OPTION)

OPTION

DRIVE SHAFT		
#365320	CVD	(INCLUDED)
#365300	ECS	(OPTION)

ECS DRIVE SHAFT:
- Decreases vibration
- Improves stability
- Improves traction on rear suspension
- Improves landing after jumps
- Easier to drive

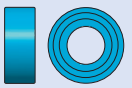

359050
BB 5x10x4

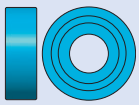

359051
BB 5x12x4

2x L=R

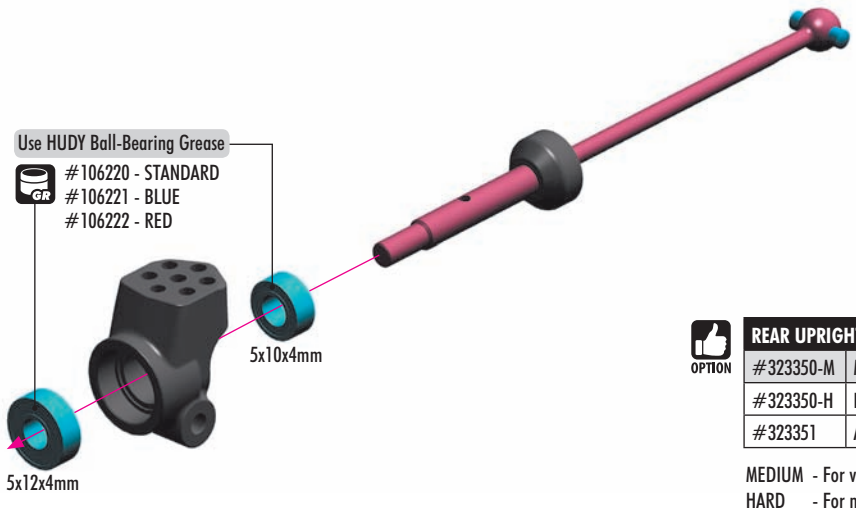

OPTION

REAR UPRIGHTS		
#323350-M	MEDIUM	(INCLUDED)
#323350-H	HARD	(OPTION)
#323351	ALU	(OPTION)

MEDIUM - For very-low & low traction
HARD - For medium & high traction
ALU - For very-high traction

980210
P 2x10

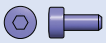

902205
SH M2x5

2x L=R

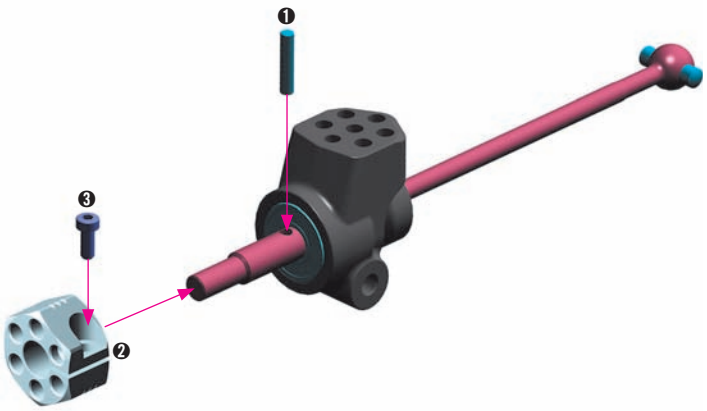

OPTION

OPTIONAL OFF-SET HEX HUB EFFECTS

Different off-set hex hubs are used to increase or decrease the track-width.

LESS OFF-SET
Rear - more traction
Front - more steering

MORE OFF-SET
Rear - less traction
Front - less steering

WHEEL HUBS 12MM			
#365357	+4.5mm		(INCLUDED)
#365359	+3.75mm	- 5 slots	(OPTION)
#365358	+3.0mm	- 4 slots	(OPTION)
#365357	+2.25mm	- 3 slots	(OPTION)
#365356	+1.5mm	- 2 slots	(OPTION)
#365355	+0.75mm	- 1 slot	(OPTION)
#365353	0mm	- 0 slots	(OPTION)
#365354	-0.75mm	- Lightw.	(OPTION)

SET-UP BOOK
TRACK-WIDTH

902312
SH M3x12

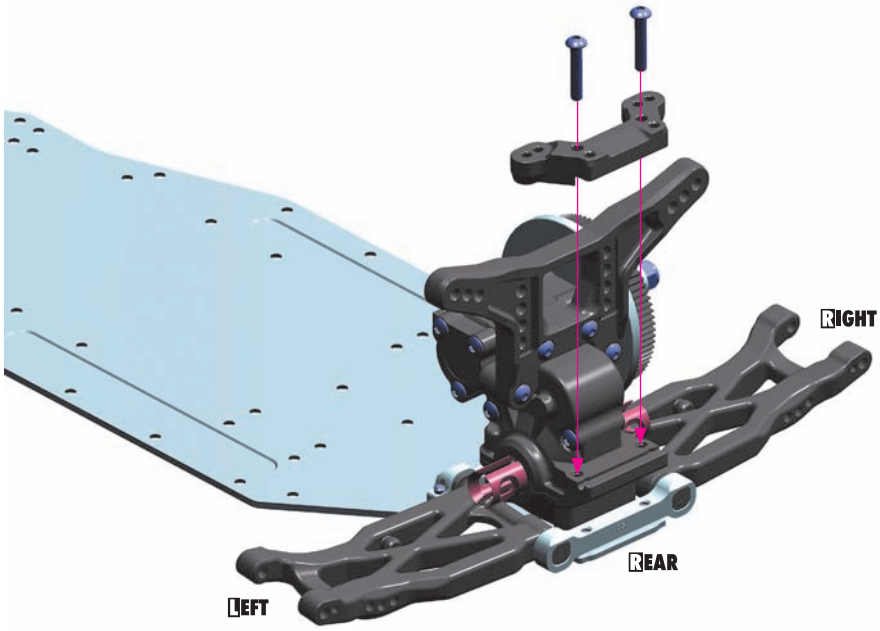

OPTION

REAR ROLL-CENTER HOLDER		
#323042-M	MEDIUM	(INCLUDED)
#323042-H	HARD	(OPTION)

MEDIUM - For low & medium traction
HARD - For high traction

306219
SHIM 3x6x2

902254
SH M2.5x4

SET-UP BOOK
WHEELBASE

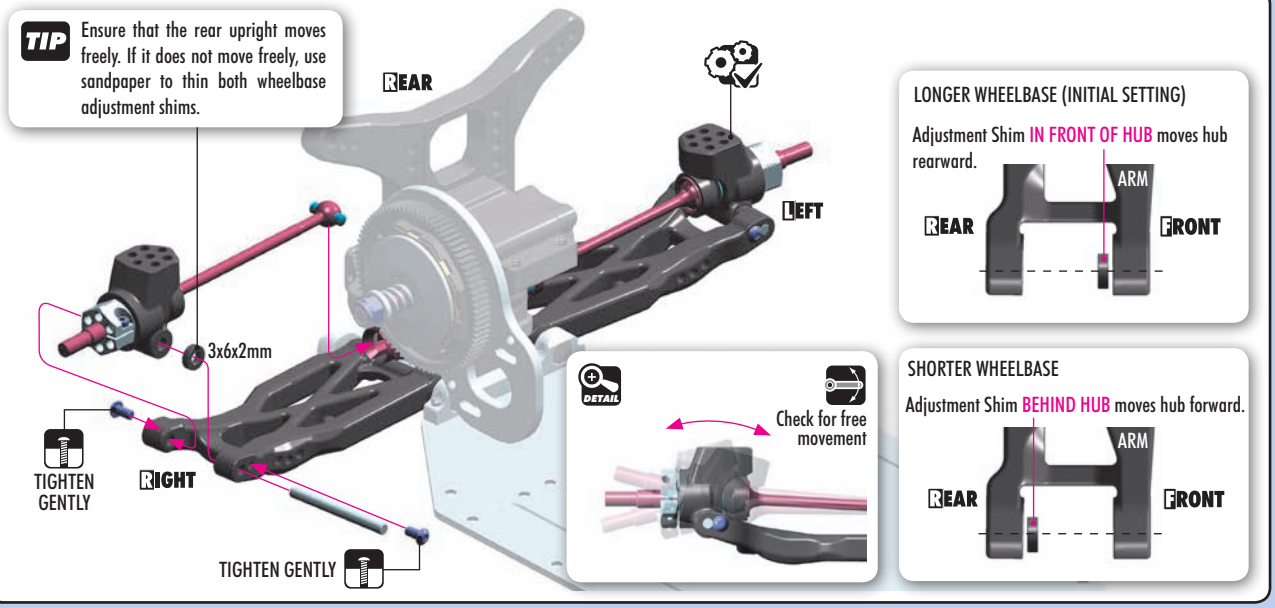

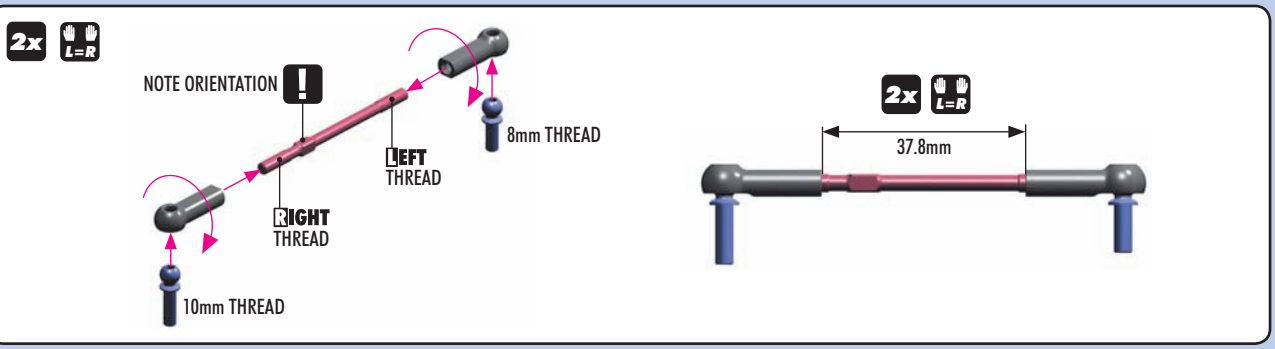

303123
SHIM 3x6x2

362280
CON. SHIM 3x6x2

SET-UP BOOK
CAMBER

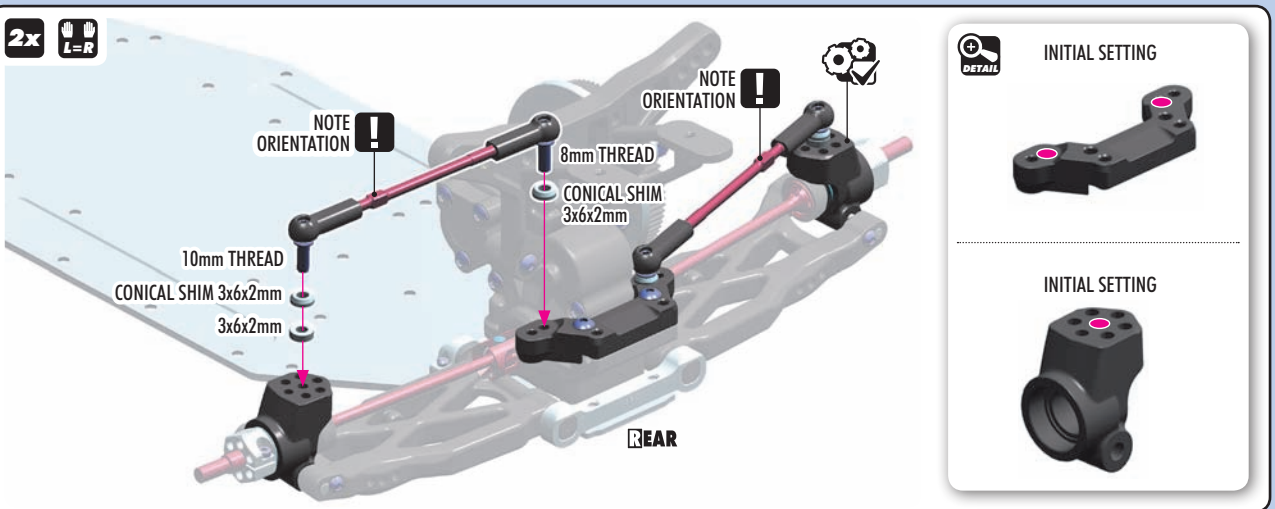

902310
SH M3x10

SET-UP BOOK
REAR WING

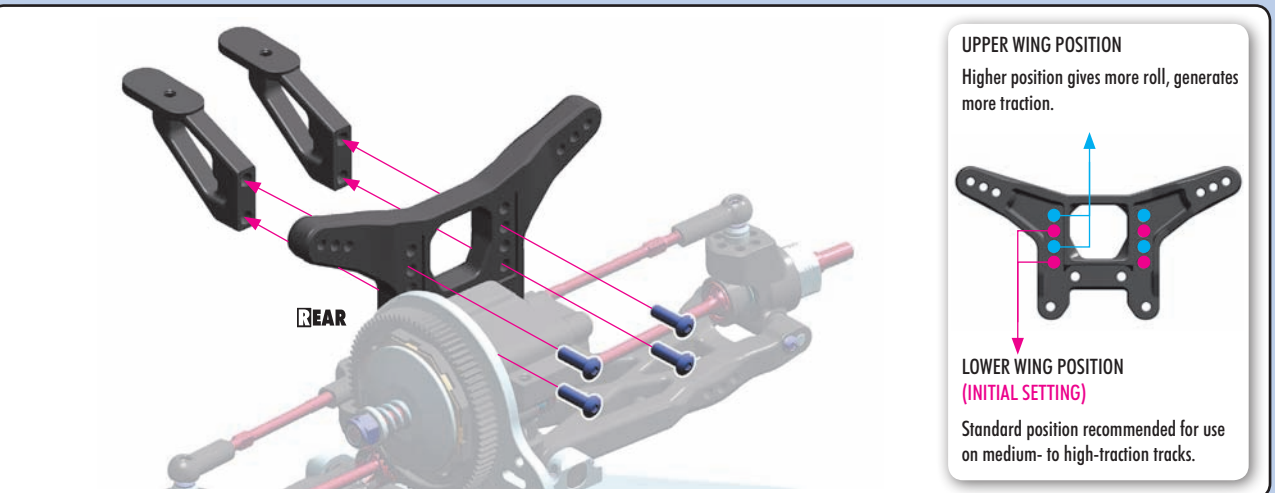

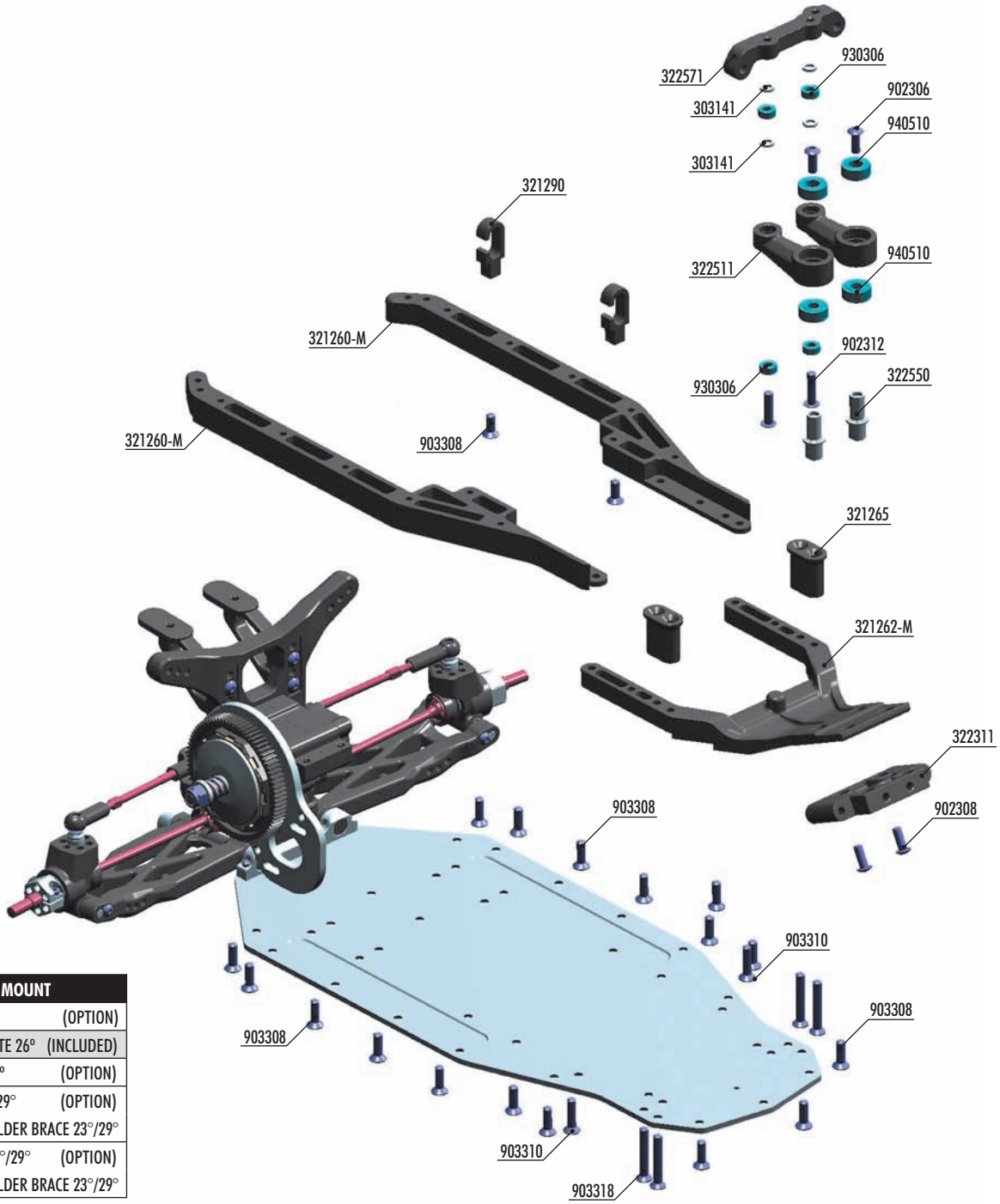

OPTION

FRONT LOWER ARM MOUNT		
#322310	ALU 26°	(OPTION)
#322311	COMPOSITE 26°	(INCLUDED)
#322312	BRASS 26°	(OPTION)
#322313	ALU 23°/29°	(OPTION)
#321211	SUSP. HOLDER BRACE 23°/29°	
#322314	BRASS 23°/29°	(OPTION)
#321211	SUSP. HOLDER BRACE 23°/29°	

OPTION

STEERING PLATE		
#322570	ALU	(OPTION)
#322571	COMPOSITE	(INCLUDED)

OPTION

STEERING ARMS		
#322510	ALU	(OPTION)
#322511	COMPOSITE	(INCLUDED)

FRONT LOWER CHASSIS BRACE		
#321262-M	MEDIUM	(INCLUDED)
#321262-H	HARD	(OPTION)

BAG 04

30 3141	ALU SHIM 3x5x1.0MM (10)
32 1260-M	COMPOSITE CHASSIS SIDE GUARDS L+R - MEDIUM - V2
32 1262-M	COMPOSITE CHASSIS FRONT GUARD - MEDIUM
32 1262-H	COMPOSITE CHASSIS FRONT GUARD - HARD (OPTION)
32 1265	COMPOSITE FRONT CHASSIS SIDE BRACE (2)
32 1290	COMPOSITE WIRE HOLDER (2)
32 2310	ALU FRONT LOWER ARM MOUNT 26° KICK-UP - SWISS 7075 T6 (OPTION)
32 2311	COMPOSITE FRONT LOWER ARM MOUNT 26° KICK-UP
32 2312	BRASS FRONT LOWER ARM MOUNT 26° KICK-UP (OPTION)
32 2570	ALU STEERING PLATE - SWISS 7075 T6 (OPTION)
32 2571	COMPOSITE STEERING PLATE
32 2510	ALU STEERING ARM (2) (OPTION)
32 2511	COMPOSITE STEERING ARM (2)
32 2550	ALU SERVO SAVER PIVOT SHAFT (2)
90 2306	HEX SCREW SH M3x6 (10)
90 2308	HEX SCREW SH M3x8 (10)
90 2312	HEX SCREW SH M3x12 (10)
90 3308	HEX SCREW SFH M3x8 (10)
90 3310	HEX SCREW SFH M3x10 (10)
90 3318	HEX SCREW SFH M3x18 (10)
93 0306	BALL-BEARING 3x6x2.5 (2)
94 0510	HIGH-SPEED BALL-BEARING 5x10x4 RUBBER SEALED (2)

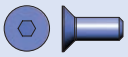

903308
SFH M3x8

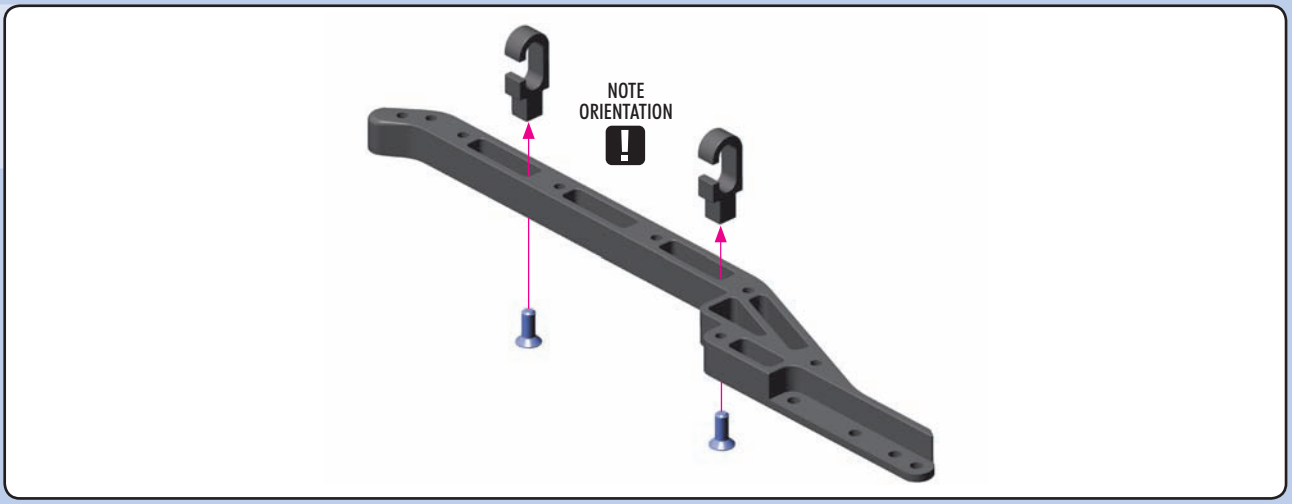

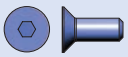

903308
SFH M3x8

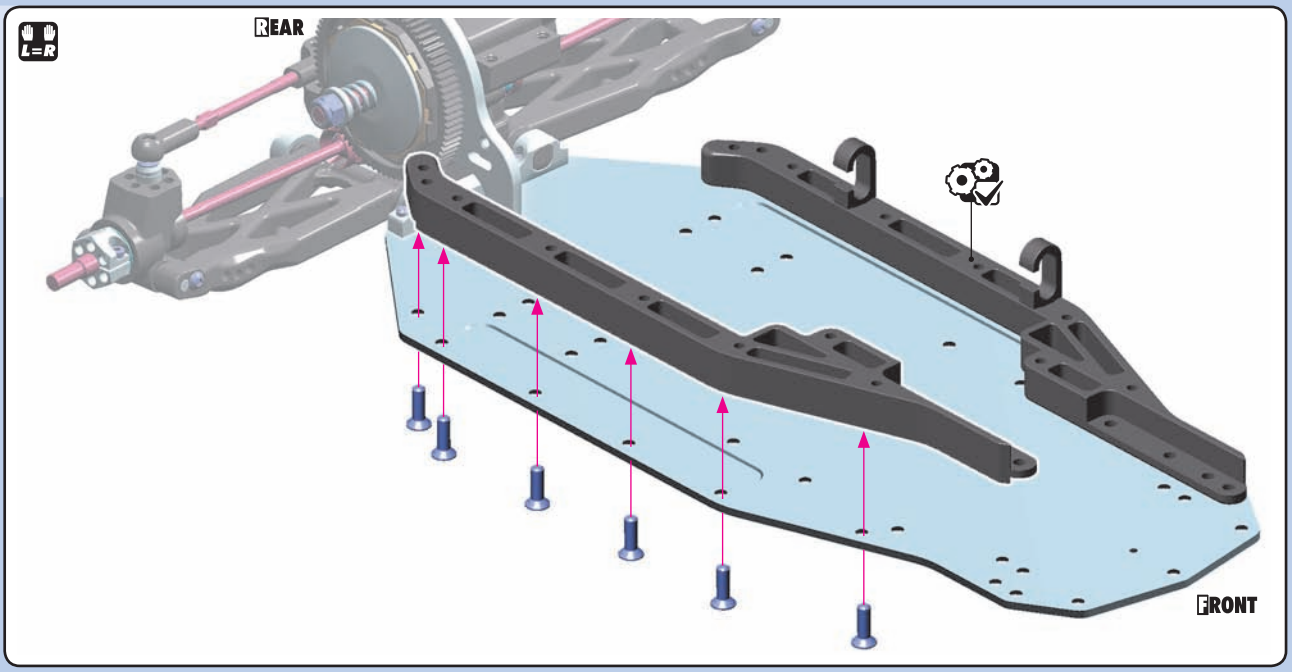

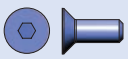

903308
SFH M3x8

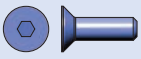

903310
SFH M3x10

903318
SFH M3x18

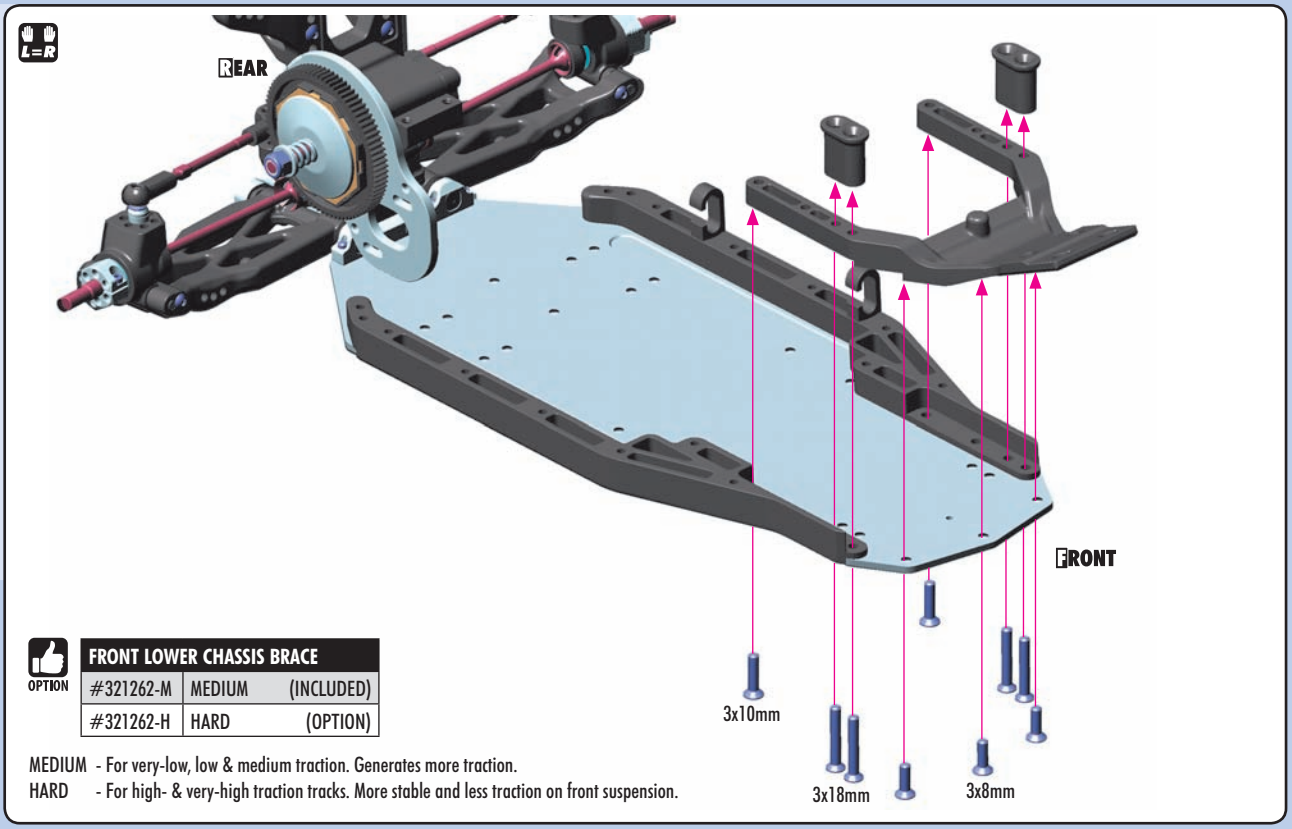

OPTION

FRONT LOWER CHASSIS BRACE		
#321262-M	MEDIUM	(INCLUDED)
#321262-H	HARD	(OPTION)

MEDIUM - For very-low, low & medium traction. Generates more traction.
HARD - For high- & very-high traction tracks. More stable and less traction on front suspension.


303141
SHIM 3x5x1


902312
SH M3x12


930306
BB 3x6x2.5

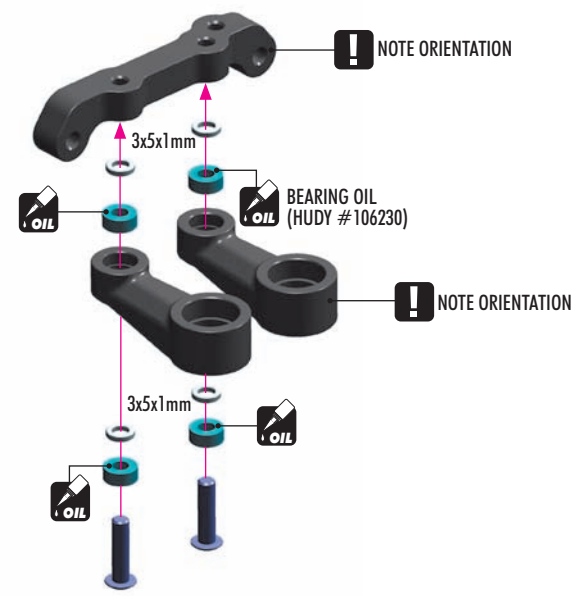

OPTION

STEERING PLATE		
#322571	COMPOSITE	(INCLUDED)
#322570	ALU	(OPTION)

COMPOSITE - easy to drive, more forgiving, less steering
ALU - more aggressive, more steering, more precise steering

OPTION

STEERING ARMS		
#322511	COMPOSITE	(INCLUDED)
#322510	ALU	(OPTION)

COMPOSITE - easy to drive and more forgiving
ALU - more aggressive, more precise steering

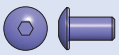
902306
SH M3x6

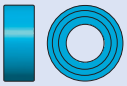
940510
BB 5x10x4

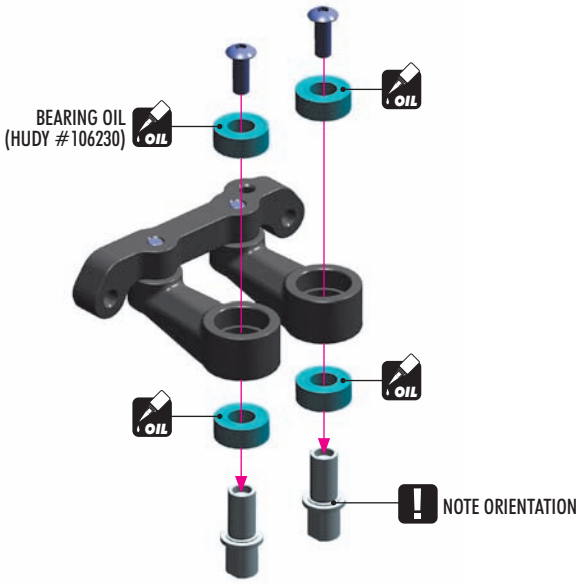

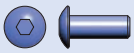
902308
SH M3x8

OPTION

FRONT LOWER ARM MOUNT		
#322310	ALU 26°	(OPTION)
#322311	COMPOSITE 26°	(INCLUDED)
#322312	BRASS 26°	(OPTION)
#322313 + #321211	ALU 23°/29°	(OPTION)
	SUSP. HOLDER BRACE 23°/29°	
#322314 + #321211	BRASS 23°/29°	(OPTION)
	SUSP. HOLDER BRACE 23°/29°	

COMPOSITE - Generates more traction in front
ALU - Makes car more stable
BRASS - Adds more weight in front, less weight transfer

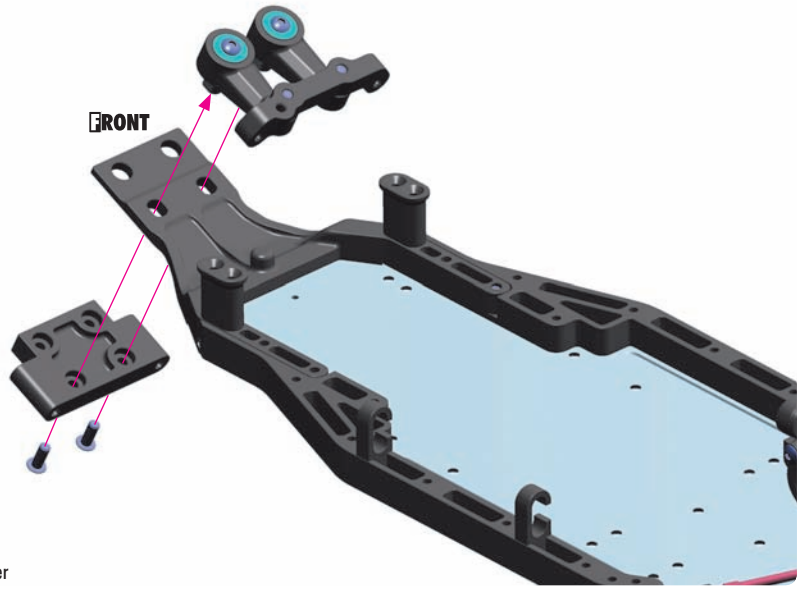

SET-UP BOOK
FRONT KICK-UP

5. FRONT SUSPENSION

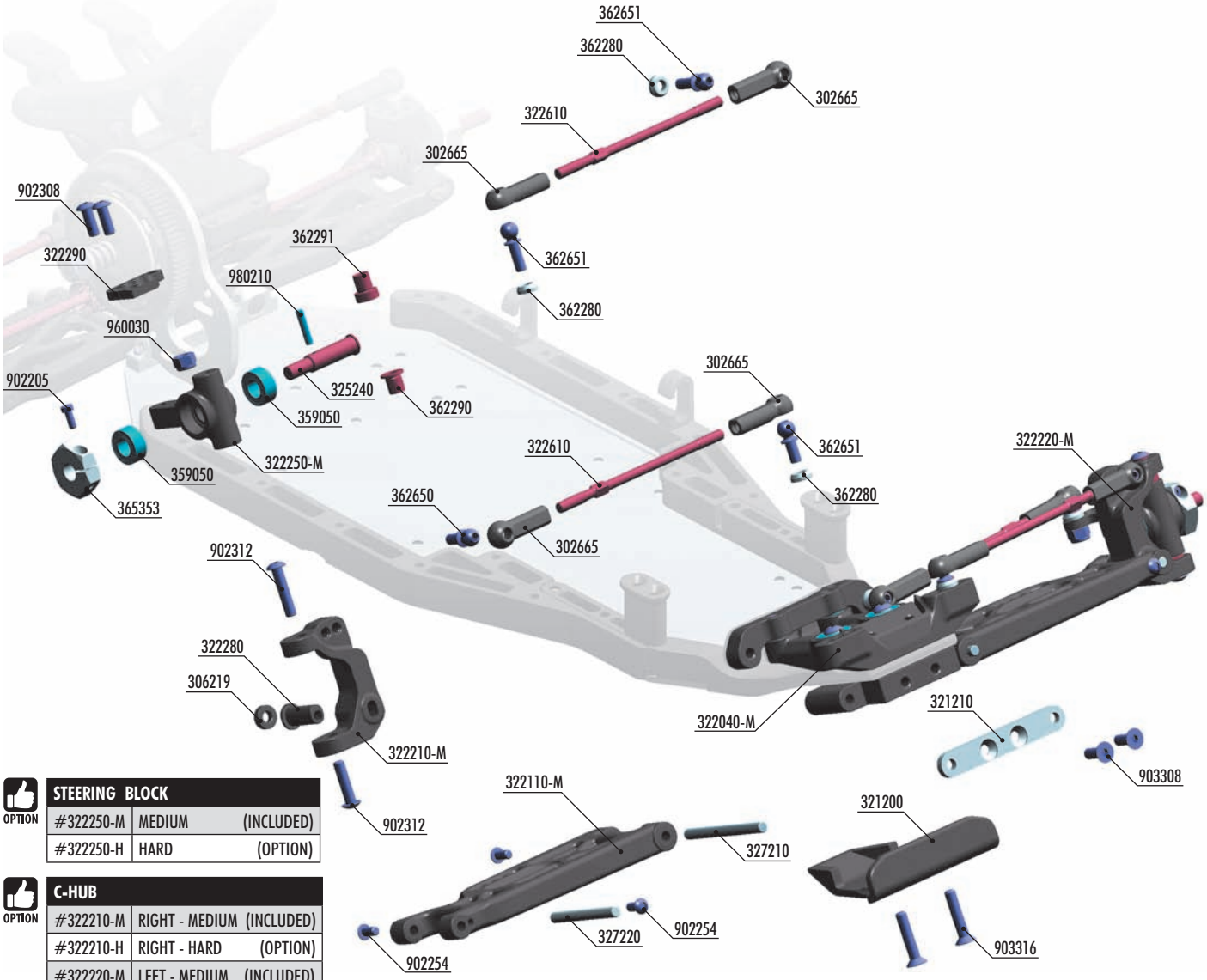

OPTION

STEERING BLOCK		
#322250-M	MEDIUM	(INCLUDED)
#322250-H	HARD	(OPTION)

OPTION

C-HUB		
#322210-M	RIGHT - MEDIUM	(INCLUDED)
#322210-H	RIGHT - HARD	(OPTION)
#322220-M	LEFT - MEDIUM	(INCLUDED)
#322220-H	LEFT - HARD	(OPTION)

OPTION

WHEEL HUBS 12MM		
#365357	+4.5mm	(OPTION)
#365359	+3.75mm - 5 slots	(OPTION)
#365358	+3.0mm - 4 slots	(OPTION)
#365357	+2.25mm - 3 slots	(OPTION)
#365356	+1.5mm - 2 slots	(OPTION)
#365355	+0.75mm - 1 slot	(OPTION)
#365353	0mm - 0 slots	(INCLUDED)
#365354	-0.75mm - Lightw.	(OPTION)

OPTION

ALU SUSPENSION HOLDER BRACE		
#321210	26°	(INCLUDED)
#321211	23° / 29°	(OPTION)

OPTION

SUSPENSION ARM		
#322110-M	MEDIUM	(INCLUDED)
#322110-H	HARD	(OPTION)
#322110-G	GRAPHITE	(OPTION)

OPTION

STEERING BLOCK EXTENSION		
#322290	2-SLOTS	(INCLUDED)
#322291	1-SLOT	(OPTION)
#322292	0-SLOTS	(OPTION)

OPTION

FRONT ROLL CENTER HOLDER		
#322040-M	MEDIUM	(INCLUDED)
#322040-H	HARD	(OPTION)
#322041	ALU	(OPTION)

BAG 05

30 2665	COMPOSITE BALL JOINT 4.9MM - CLOSED WITH HOLE (4)
30 6219	COMPOSITE SET OF SERVO SHIMS (4)
32 1200	COMPOSITE FRONT BUMPER
32 1210	ALU SUSPENSION HOLDER BRACE - SWISS 7075 T6 (3MM)
32 2040-M	COMPOSITE FRONT ROLL CENTER HOLDER - MEDIUM
32 2040-H	COMPOSITE FRONT ROLL CENTER HOLDER - HARD (OPTION)
32 2041	ALU FRONT ROLL CENTER HOLDER - SWISS 7075 T6 (OPTION)
32 2110-M	COMPOSITE SUSPENSION ARM FRONT LOWER - MEDIUM
32 2110-H	COMPOSITE SUSPENSION ARM FRONT LOWER - HARD (OPTION)
32 2110-G	COMPOSITE SUSPENSION ARM FRONT LOWER - GRAPHITE (OPTION)
32 2210-M	COMPOSITE C-HUB 0° DEG. RIGHT - MEDIUM
32 2210-H	COMPOSITE C-HUB 0° DEG. RIGHT - HARD (OPTION)
32 2220-M	COMPOSITE C-HUB 0° DEG. LEFT - MEDIUM
32 2220-H	COMPOSITE C-HUB 0° DEG. LEFT - HARD (OPTION)
32 2250-M	COMPOSITE STEERING BLOCK - MEDIUM
32 2250-H	COMPOSITE STEERING BLOCK - HARD (OPTION)
32 2280	COMPOSITE CASTER ECCENTRIC BUSHING (2+2+2)
32 2290	GRAPHITE EXTENSION FOR STEERING BLOCK - 2 SLOTS (2)
32 2291	GRAPHITE EXTENSION FOR STEERING BLOCK - 1 SLOT (2) (OPTION)
32 2292	GRAPHITE EXTENSION FOR STEERING BLOCK - 0 SLOTS (2) (OPTION)
32 2610	ADJUSTABLE TURNBUCKLE 55MM M3 L/R - HUDY SPRING STEEL™ (2)
32 5240	FRONT DRIVE AXLE - HUDY SPRING STEEL™
32 7210	FRONT SUSPENSION PIVOT PIN (2)
32 7220	FRONT ARM PIVOT PIN (2)
35 9050	BALL-BEARING MR105ZZ 5x10x4 (2)
36 2280	ALU CONICAL SHIM 3x6x2.0MM (10)
36 2290	STEEL STEERING BUSHING - SHORT (2)
36 2291	STEEL STEERING BUSHING - LONG (2)
36 2650	BALL END 4.9MM WITH THREAD 6MM (2)
36 2651	BALL END 4.9MM WITH THREAD 8MM (2)
36 5353	ALU WHEEL HUB 12MM (2)
90 2205	HEX SCREW SH M2x5 (10)
90 2254	HEX SCREW SH M2.5x4 (10)
90 2308	HEX SCREW SH M3x8 (10)
90 2312	HEX SCREW SH M3x12 (10)
90 3308	HEX SCREW SFH M3x8 (10)
90 3316	HEX SCREW SFH M3x16 (10)
96 0030	NUT M3 (10)
98 0210	PIN 2x9.8 (10)

902254
SH M2.5x4

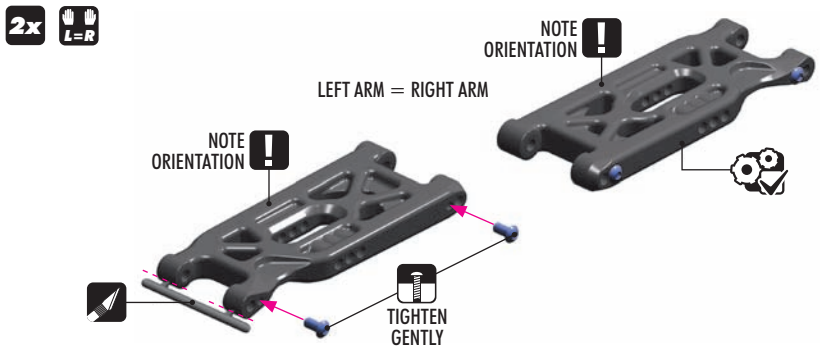

OPTION

SUSPENSION ARM		
#322110-M	MEDIUM	(INCLUDED)
#322110-H	HARD	(OPTION)
#322110-G	GRAPHITE	(OPTION)

MEDIUM - For very-low & low traction
HARD - For medium & high traction
GRAPHITE - For high & very-high traction

903308
SFH M3x8

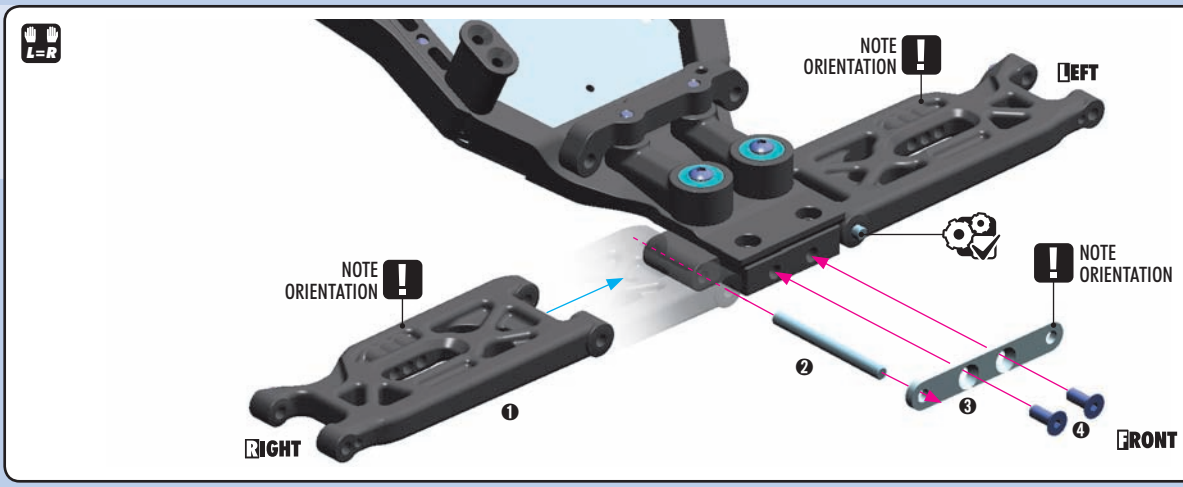

903316
SFH M3x16

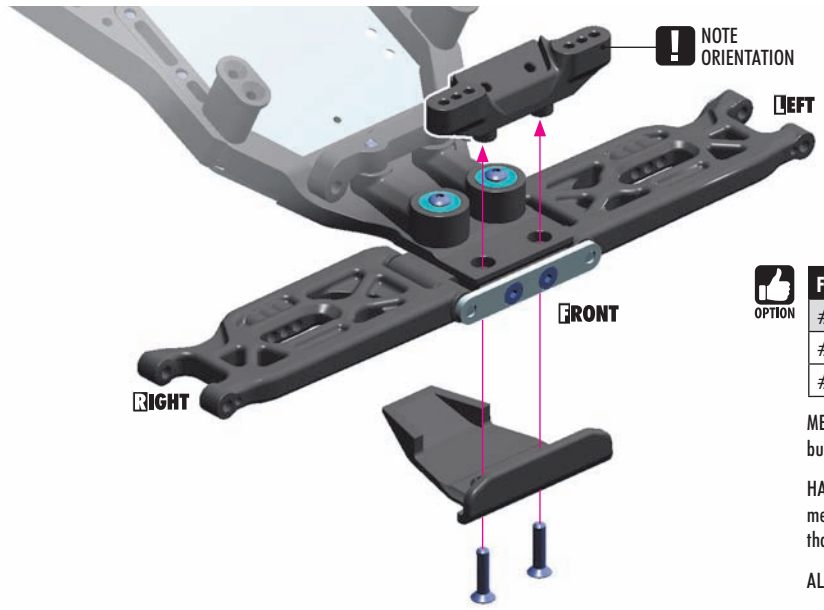

OPTION

FRONT ROLL CENTER HOLDER		
#322040-M	MEDIUM	(INCLUDED)
#322040-H	HARD	(OPTION)
#322041	ALU	(OPTION)

MEDIUM - generates more traction, absorbs bumps better

HARD - more precise, absorbs less bumps than medium but still more than alu, more reactive than medium composite but less than alu

ALU - more precise and increased strength

SET-UP BOOK
ROLL CENTER

902308
SH M3x8

359050
BB 5x10x4

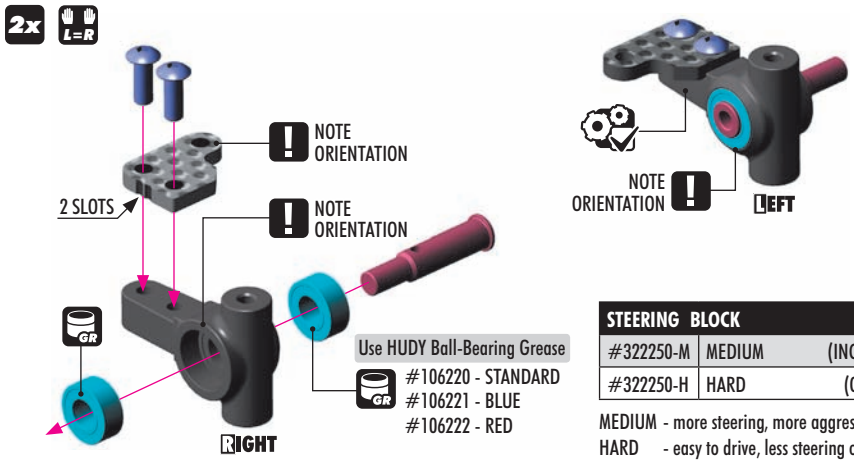

Use HUDY Ball-Bearing Grease
GR #106220 - STANDARD
#106221 - BLUE
#106222 - RED

STEERING BLOCK		
#322250-M	MEDIUM	(INCLUDED)
#322250-H	HARD	(OPTION)

MEDIUM - more steering, more aggressive
HARD - easy to drive, less steering on-power

OPTION

STEERING BLOCK EXTENSION		
#322290	2-SLOTS	(INCLUDED)
#322291	1-SLOT	(OPTION)
#322292	0-SLOTS	(OPTION)

2 SLOTS - turns outside wheels less, easier to drive, less aggressive

1 SLOT - between 2 and 0

0 SLOTS - most aggressive steering, suggested for very technical small tracks

SET-UP BOOK
STEERING

902205
SH M2x5

981210
P 2x10

SET-UP BOOK
TRACK-WIDTH

2x L=R

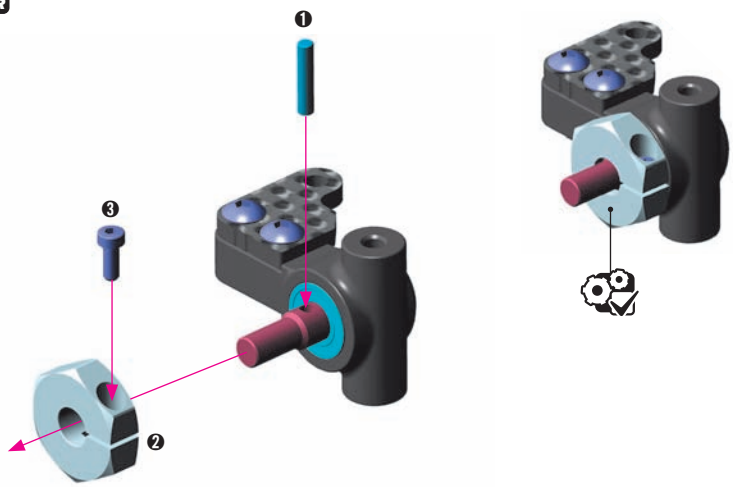

OPTIONAL OFF-SET HEX HUB EFFECTS

OPTION

Different off-set hex hubs are used to increase or decrease the track-width.

LESS OFF-SET	MORE OFF-SET
Rear - more traction	Rear - less traction
Front - more steering	Front - less steering

WHEEL HUBS 12MM		
#365357	+4.5mm	(OPTION)
#365359	+3.75mm - 5 slots	(OPTION)
#365358	+3.0mm - 4 slots	(OPTION)
#365357	+2.25mm - 3 slots	(OPTION)
#365356	+1.5mm - 2 slots	(OPTION)
#365355	+0.75mm - 1 slot	(OPTION)
#365353	0mm - 0 slots	(INCLUDED)
#365354	-0.75mm - Lightw.	(OPTION)

902312
SH M3x12

SET-UP BOOK
ROLL CENTER

2x L=R

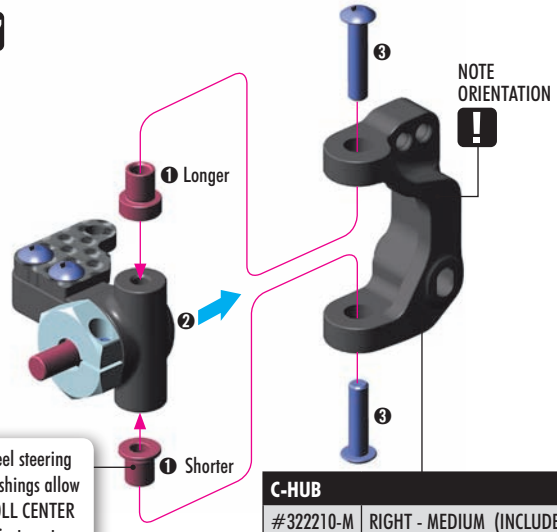

Steel steering bushings allow ROLL CENTER adjustment.

C-HUB		
#322210-M	RIGHT - MEDIUM	(INCLUDED)
#322210-H	RIGHT - HARD	(OPTION)
#322220-M	LEFT - MEDIUM	(INCLUDED)
#322220-H	LEFT - HARD	(OPTION)

MEDIUM - For very-low, low & meidum traction. Absorbs bumps better, easy to drive.
HARD - For high & very-high traction. More steering, more aggressive.

DETAIL

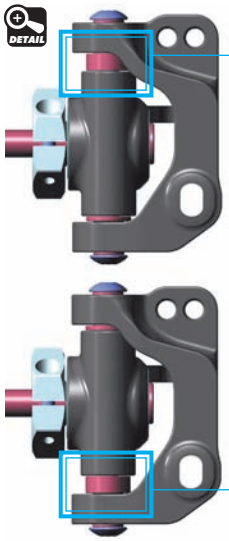

LOWER ROLL CENTER (INITIAL SETTING)

TOP = LONGER bushing
BOTTOM = SHORTER bushing

Recommended for rough tracks to improve stability.

HIGHER ROLL CENTER

TOP = SHORTER bushing
BOTTOM = LONGER bushing

Recommended for smooth tracks to gain more steering.

306219
SHIM 3x6x1

902254
SH M2.5x4

SET-UP BOOK
CASTER

2x L=R

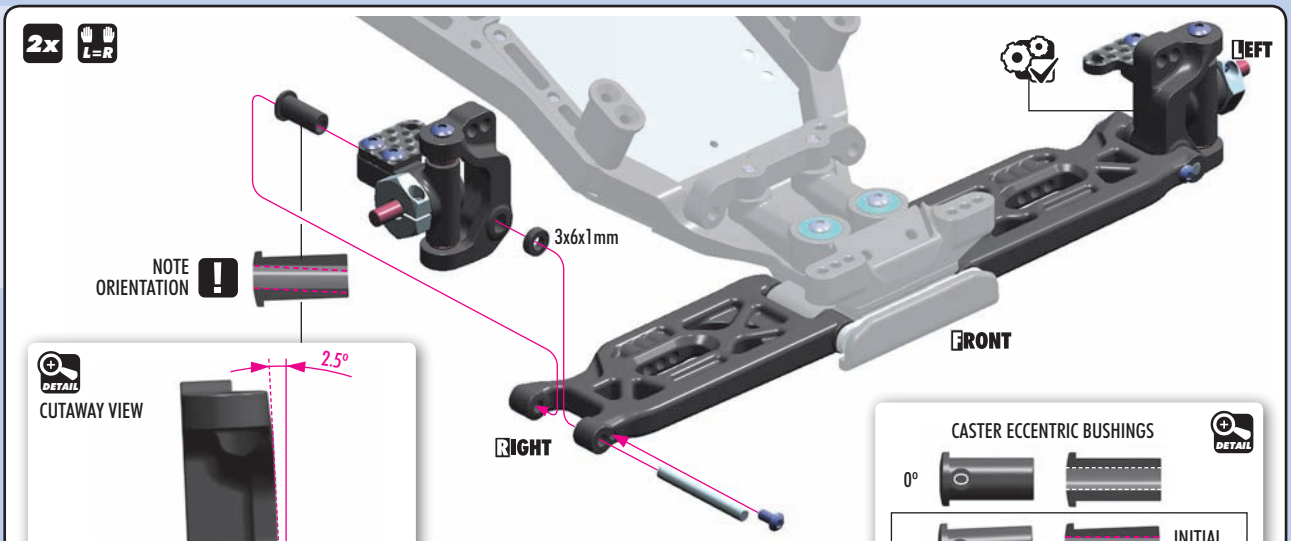

DETAIL

CUTAWAY VIEW

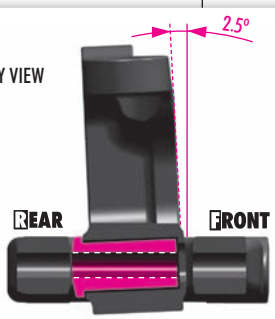

LESS CASTER = increased steering off-power

MORE CASTER = less steering off-power

CASTER ECCENTRIC BUSHINGS

DETAIL

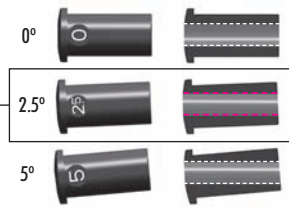

ROLL CENTER LINKS

2x L=R

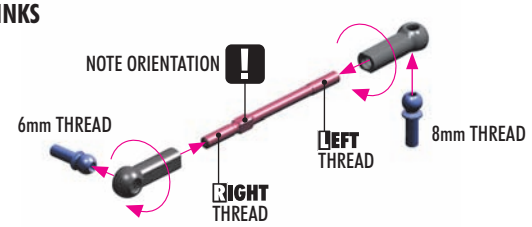

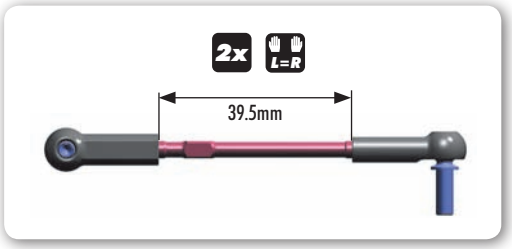

362280
CON. SHIM 3x6x2

ROLL CENTER LINKS

2x L=R

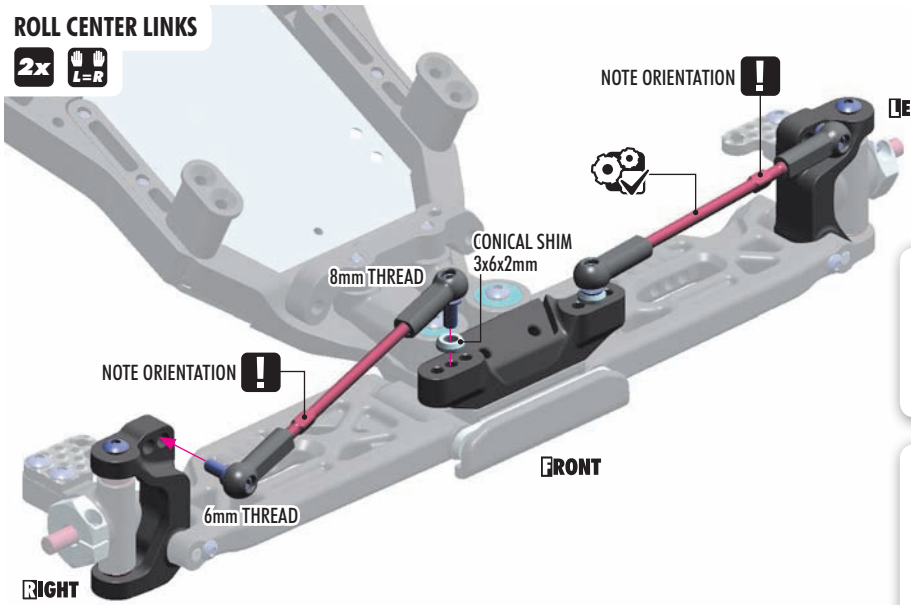

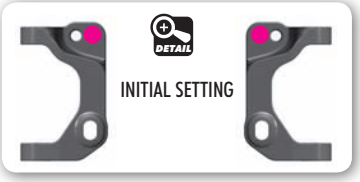

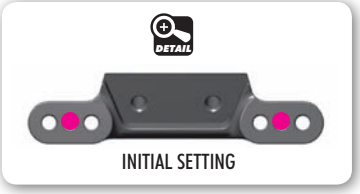

SET-UP BOOK
ROLL CENTER

STEERING LINKS

2x L=R

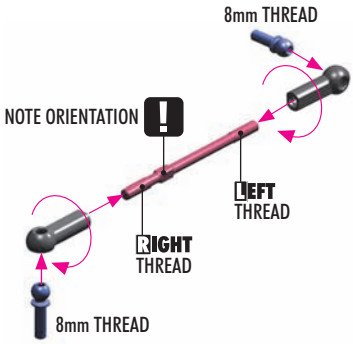

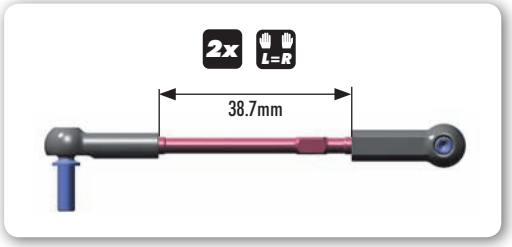

362280
CON. SHIM 3x6x2

960030
NUT M3

STEERING LINKS

2x L=R

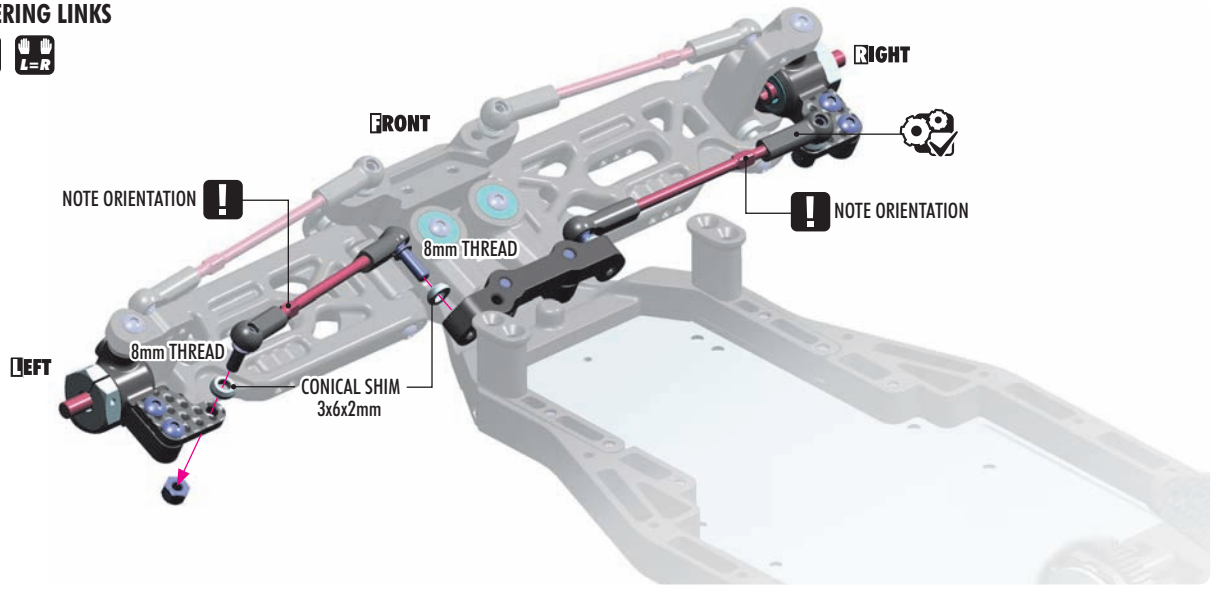

6. SHOCK ABSORBERS

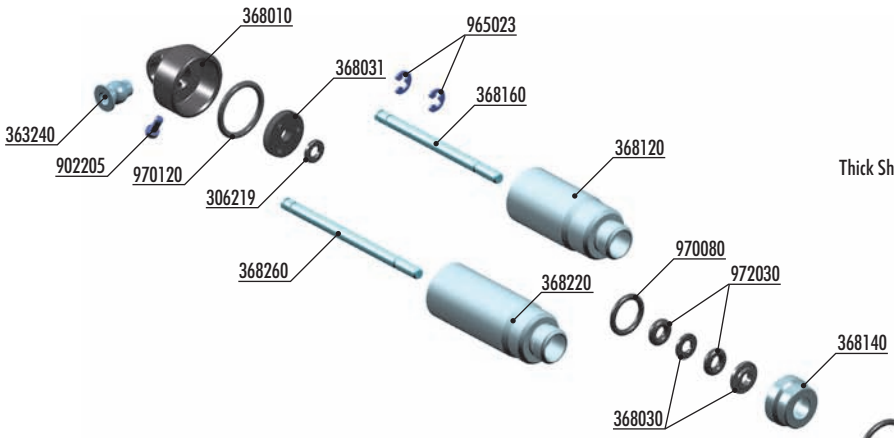

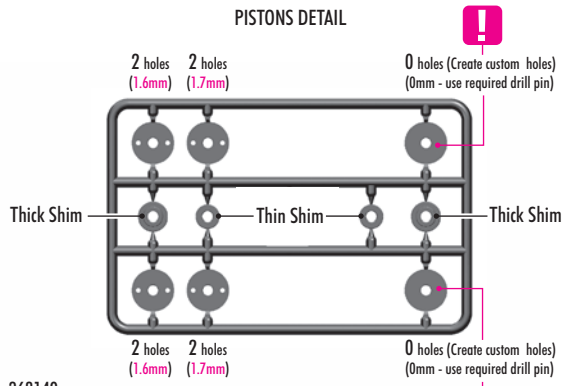

These pistons can NOT be used in shocks without making the custom holes by yourselves.

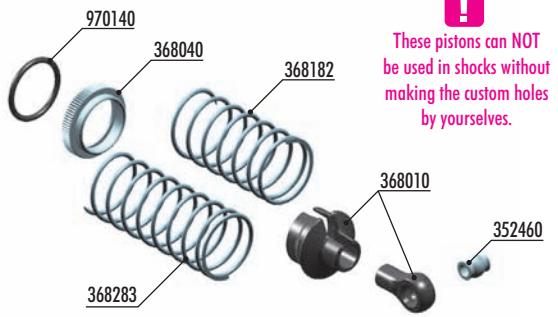

OPTION

FRONT SPRINGS			
#368174	PROGRESSIVE	▮▮	OPTION
#368175	40mm	• • •	OPTION
#368182	LINEAR	▮• • •	INCLUDED
#368183	LINEAR	•	OPTION
#368184	LINEAR	• •	OPTION
#368185	LINEAR	• • •	OPTION
#368186	LINEAR	• • • •	OPTION

REAR SPRINGS			
#368273	PROGRESSIVE	▮▮	OPTION
#368275	55mm	• •	OPTION
#368283	LINEAR	▮• • •	INCLUDED
#368284	LINEAR	•	OPTION
#368285	LINEAR	• •	OPTION
#368286	LINEAR	• • •	OPTION
#368287	LINEAR	• • • •	OPTION

OPTION

SHOCK PARTS	
#368051	ALU SHOCK CAP-NUT WITH VENT HOLE (2)
#368021	ALU SHOCK SPRING RETAINING COLLAR (4)

BAG 06

30 6219	COMPOSITE SET OF SERVO SHIMS (4)
35 2460	PIVOT BALL 5.8 - V3 (10)
36 3240	BALL UNIVERSAL 5.8MM WITH BACKSTOP (2)
36 8010	COMPOSITE SHOCK PARTS
36 8031	SHOCK PISTONS - COMPLETE SET - DERLIN
36 8040	ALU SHOCK ADJUSTABLE NUT (2)
36 8100	FRONT SHOCK ABSORBERS COMPLETE SET (2)
36 8120	ALU FRONT SHOCK BODY - HARD COATED (2)
36 8140	ALU LOWER SHOCK BODY CAP (2)
36 8160	FRONT HARDENED SHOCK SHAFT (2)
36 8182	FRONT SPRING SET - 1 STRIPE & 3 DOTS (2)
36 8186	FRONT SPRING-SET - 4 DOTS (2) (OPTION)
36 8200	REAR SHOCK ABSORBERS COMPLETE SET (2)
36 8220	ALU REAR SHOCK BODY - HARD COATED (2)
36 8260	REAR HARDENED SHOCK SHAFT (2)
36 8283	REAR SPRING SET - 1 STRIPE & 3 DOTS (2)
90 2205	HEX SCREW SH M2x5 (10)
96 5023	E-CLIP 2.3 (10)
97 0080	O-RING 8x1 (10)
97 0120	O-RING 12 x 1.0 (10)
97 0140	O-RING 14 x 1.5 (10)
97 2030	SILICONE O-RING 3x2 (10)


965023
C 2.3


972030
O 3x2


970080
O 8x1

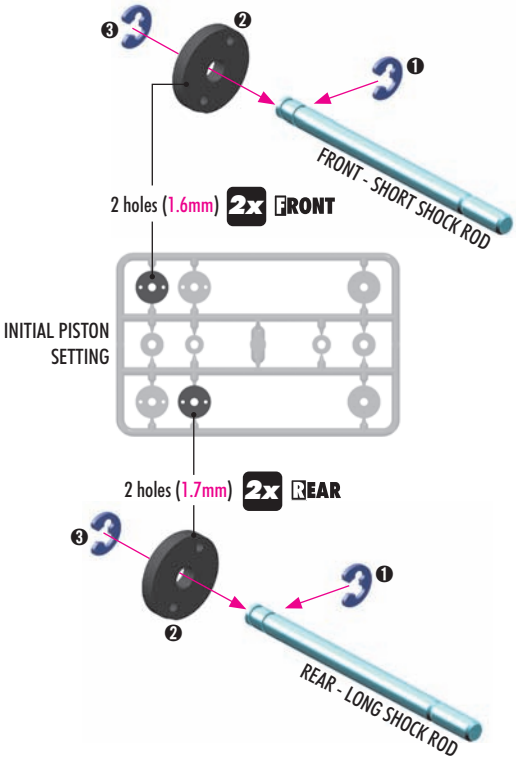

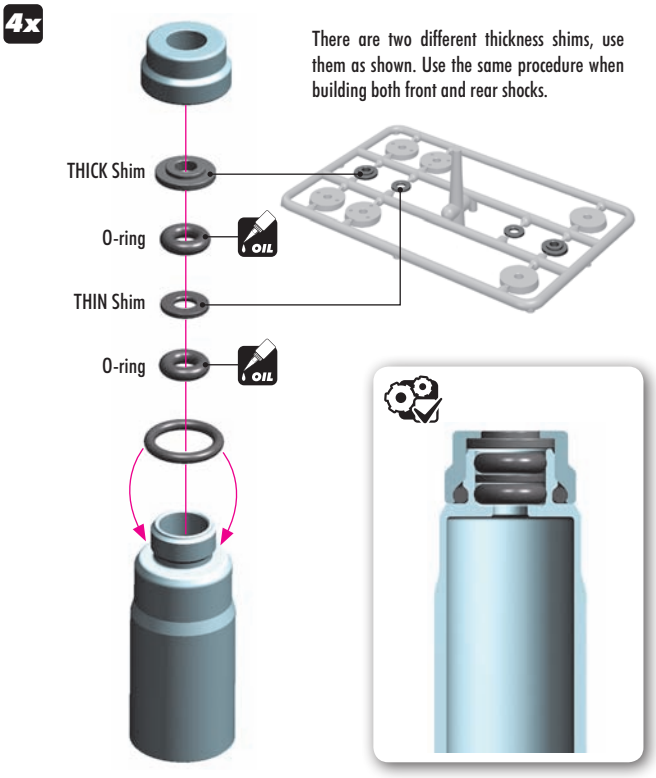

There are two different thickness shims, use them as shown. Use the same procedure when building both front and rear shocks.

SET-UP BOOK
SHOCK DAMPING
SHOCK PISTONS

306219
SHIM 3x6x1

Downstop shim. THICKER shim used, GREATER downstop is achieved.

IMPORTANT
Always use same shim thickness on right and left side to achieve same downstop.

INITIAL SETTING

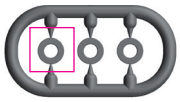

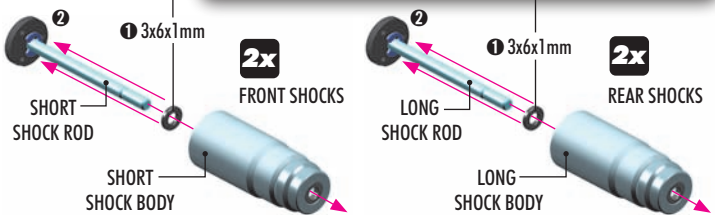

EXTREMELY IMPORTANT

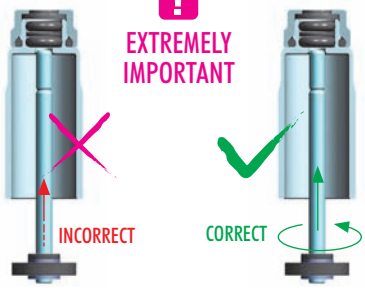

Do not push the shock rod straight through the lower shock body assembly; O-ring damage may result.

Twist the shock rod through the lower shock body assembly.

970140
O 14x1.5

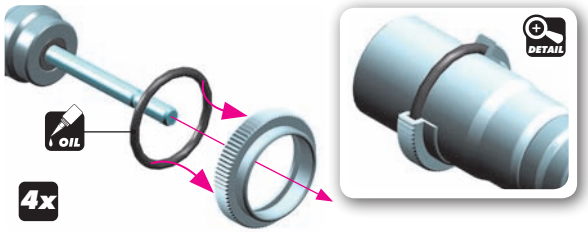

970120
O 12x1

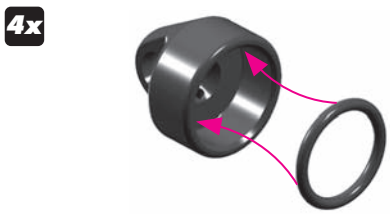

306219
SHIM 3x6x2

306219
SHIM 3x6x3

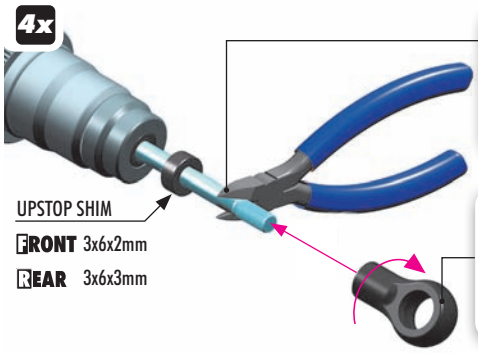

Grip the shock rod at top of exposed threads with side cutting pliers. Be careful not to damage the shock rod.

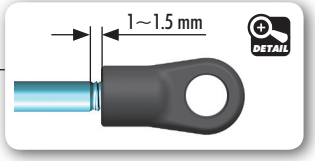

902205
SH M2x5

INITIAL SHOCK REBOUND SETTING 0% (LOW REBOUND)

Follow the steps below to set the shock rebound to the default setting of 0%.

2x FRONT (SHORT) Oil 450cSt
2x REAR (LONG) Oil 400cSt

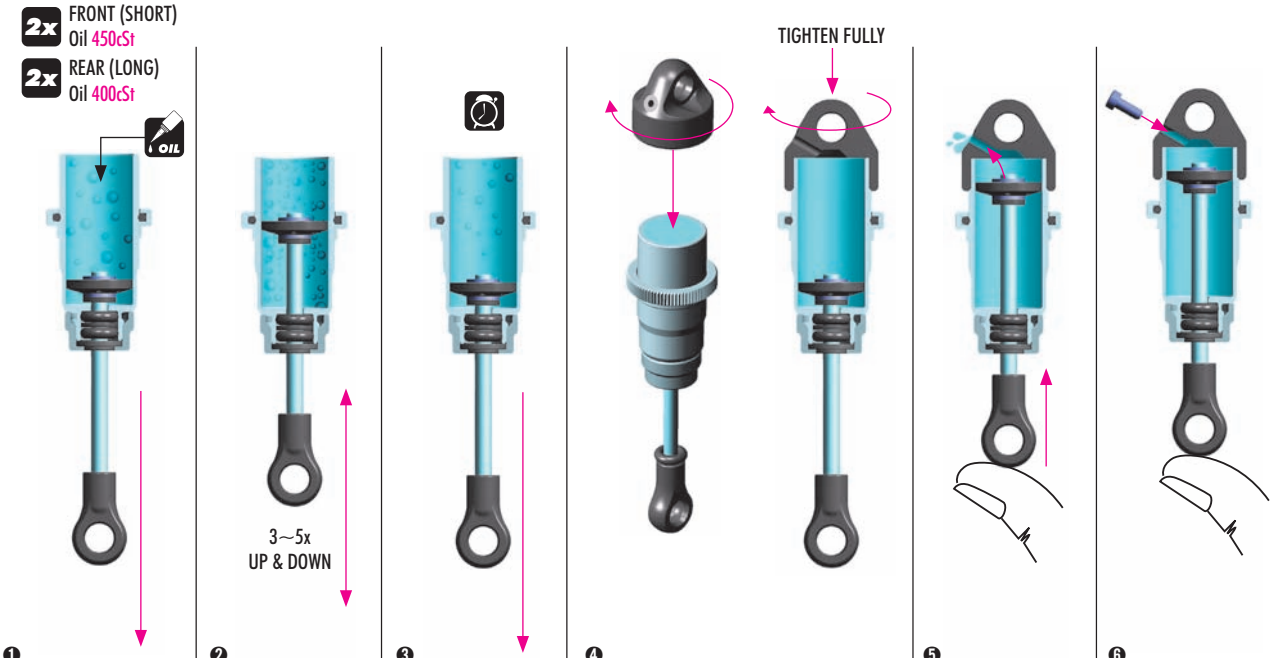

❶ Extend the shock shaft completely. Fill the shock body with the shock oil. For the FRONT shocks (short) use 450cSt oil. For the REAR shocks (long) use 400cSt oil.

❷ Move the shock shaft up and down a few times to release the air bubbles trapped beneath the piston.

❸ Orient the filled shock vertically for several minutes with the shock shaft fully extended. The remaining air bubbles will release.

❹ Gently place the shock cap onto the filled shock body and start to tighten the cup. Tighten the cap fully.

❺ Gently push the shock shaft completely into the shock body. Excess oil will flow through the hole in the shock cap.

❻ Keep the shock shaft pushed in the shock body and insert the screw into the shock cap. The rebound will be at approximately 0%

SET-UP BOOK
SHOCK OIL

2x FRONT SHOCKS (SHORT)

2x REAR SHOCKS (LONG)

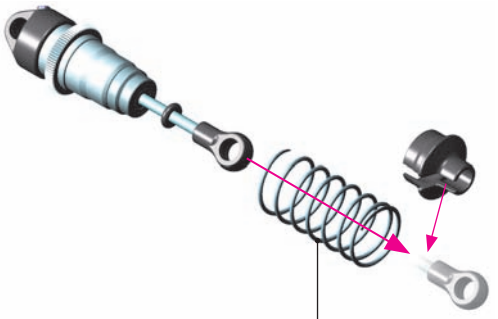

SHORT FRONT SHOCKS 2x
Short Springs

2x LONG REAR SHOCKS
Long Springs

! IMPORTANT

Both FRONT SHOCKS must be the same overall length.
Both REAR SHOCKS must be the same overall length.

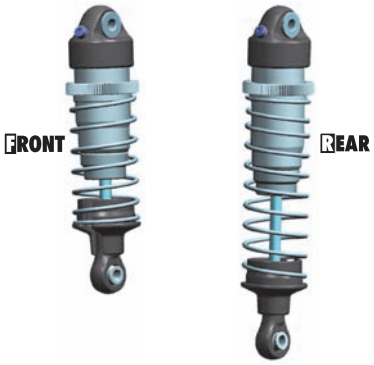

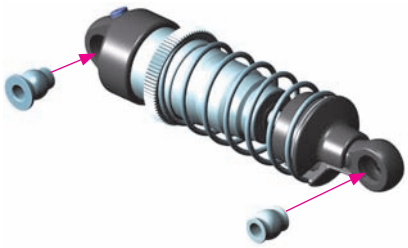

TIP ALTERNATE SHOCK REBOUND SETTING (50% AND 100%)

The default shock rebound setting is 0% (as described on page 25).
Alternatively, you may set the shock rebound setting to 50% or 100% as described below. Remove the shock springs before performing shock rebound adjustment.

SETTING THE SHOCK REBOUND TO 50% (MEDIUM REBOUND)

REMOVE SHOCK CAP AND THE SCREW FROM SHOCK CAP

❶ Extend the shock shaft completely and remove the shock cap and remove screw from shock cap.

❷ Fill the shock body with shock oil up to the top. Make sure to use same viscosity shock oil as is in the shock.

❸ Orient the filled shock vertically for several minutes with the shock shaft fully extended. The remaining air bubbles will release.

TIGHTEN FULLY

❹ Gently place the shock cap assembly onto the filled shock body.

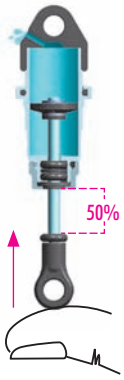

❺ Push the shock shaft 50% into the shock body. Excess oil will bleed thgrough the hole in the shock cap.

❻ Keep the shock shaft pushed 50% into the shock body and insert the screw into the shock cap. The rebound will be at approximately 50%.

SETTING THE SHOCK REBOUND TO 100% (HIGH REBOUND)

REMOVE SHOCK CAP AND THE SCREW FROM SHOCK CAP

❶ Extend the shock shaft completely and remove the shock cap.

❷ Fill the shock body with shock oil up to the top. Make sure to use same viscosity shock oil as is in the shock.

❸ Orient the filled shock vertically for several minutes with the shock shaft fully extended. The remaining air bubbles will release.

TIGHTEN FULLY

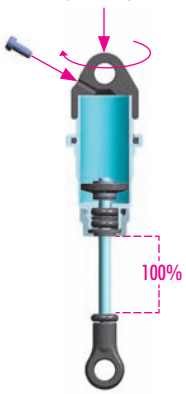

❹ Gently place the shock cap assembly onto the filled shock body. Keep the shock shaft extended 100% from the shock body and tighten the shock cap completely. The rebound will be at approximately 100%.

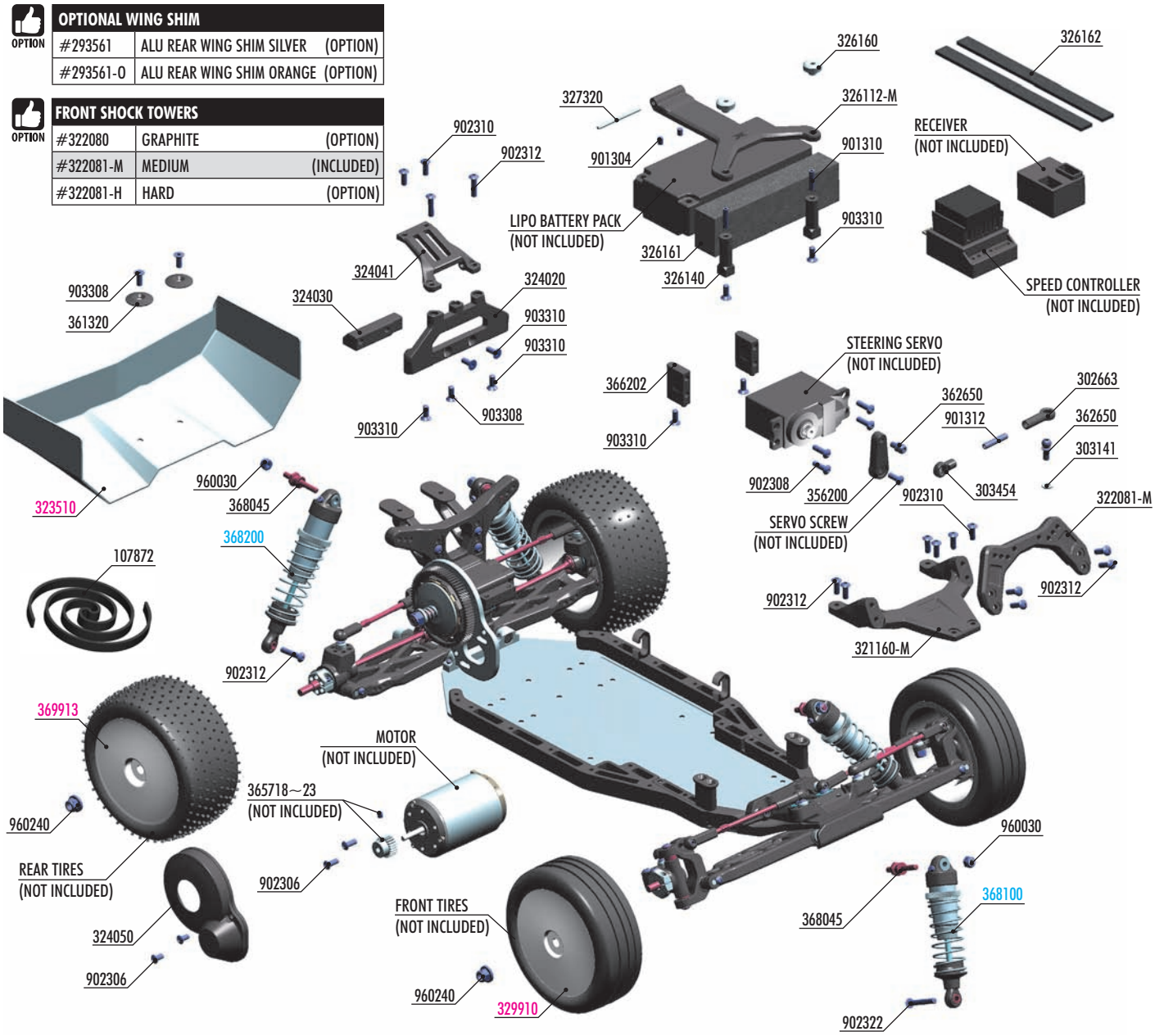

OPTIONAL WING SHIM		
#293561	ALU REAR WING SHIM SILVER	(OPTION)
#293561-O	ALU REAR WING SHIM ORANGE	(OPTION)

FRONT SHOCK TOWERS		
#322080	GRAPHITE	(OPTION)
#322081-M	MEDIUM	(INCLUDED)
#322081-H	HARD	(OPTION)

LEXAN REAR WING		
#323510	1.0MM	(INCLUDED)
#323511	1.5MM	(OPTION)

LEXAN BODY		
#329700	0.75MM	(INCLUDED)
#329701	0.5MM LIGHT	(OPTION)

BATTERY STRAP		
#326112-M	MEDIUM	(INCLUDED)
#326112-H	HARD	(OPTION)

FRONT UPPER DECK		
#321160-M	MEDIUM	(INCLUDED)
#321160-H	HARD	(OPTION)

BAG 07

10 7872	VELCRO TAPE WITH DOUBLE SIDED TAPE 8x500MM
29 3561-O	ALU REAR WING SHIM ORANGE (OPTION)
30 2663	COMPOSITE BALL JOINT 4.9MM - OPEN - V2 (8)
30 3141	ALU SHIM 3x5x1.0MM (10)
30 3454	BALL JOINT 4.9MM - OPEN (4)
32 1160-M	COMPOSITE FRONT UPPER DECK - MEDIUM
32 1160-H	COMPOSITE FRONT UPPER DECK - HARD (OPTION)
32 2081-M	COMPOSITE SHOCK TOWER FRONT - MEDIUM
32 3512	LEXAN FRONT WING 0.75MM (OPTION)
32 4020	COMPOSITE MOUNT FOR UPPER BRACE
32 4030	COMPOSITE MOTOR PLATE BRACE
32 4041	COMPOSITE MOTOR UPPER BRACE - DIRT EDITION
32 4050	COMPOSITE GEAR COVER - DIRT EDITION
32 6140	COMPOSITE BATTERY HOLDER STAND (2)
32 6160	ALU BATTERY HOLDER NUT (2)
32 6112-M	COMPOSITE BATTERY STRAP - DIRT EDITION
32 6161	FOAM SPACER FOR BATTERY
32 6162	SELF-ADHESIVE RUBBER 1.5x6.5x155MM (2)
32 7320	REAR ARM PIVOT PIN (2)
35 6200	BRAKE/THROTTLE ARMS & STEERING SERVO ARMS - SET
36 1320	BODY MOUNT, BATTERY MOUNT - V2 & WING SHIM (2)
36 2650	BALL END 4.9MM WITH THREAD 6MM (2)
36 5718～23	ALU PINION GEAR HARD COATED 18～23T/48 (OPTION)
36 6202	COMPOSITE SERVO MOUNT - HIGHER
36 8045	STEEL SCREW SHOCK PIVOT BALL WITH HEX (2)
90 1304	HEX SCREW SB M3x4 (10)
90 1310	HEX SCREW SB M3x10 (10)
90 1312	HEX SCREW SB M3x12 (10)
90 2306	HEX SCREW SH M3x6 (10)
90 2308	HEX SCREW SH M3x8 (10)
90 2310	HEX SCREW SH M3x10 (10)
90 2312	HEX SCREW SH M3x12 (10)
90 2322	HEX SCREW SH M3x22 (10)
90 3308	HEX SCREW SFH M3x8 (10)
90 3310	HEX SCREW SFH M3x10 (10)
96 0030	NUT M3 (10)
96 0240	NUT M4 WITH SERRATED FLANGE (10)
36 8100	FRONT SHOCK ABSORBERS COMPLETE SET (2)
36 8200	REAR SHOCK ABSORBERS COMPLETE SET (2)
32 3510	LEXAN REAR WING (2)
32 3511	LEXAN REAR WING 1.5MM (2) (OPTION)
32 9700	XRAY XB2 BODY
32 9701	XRAY XB2 BODY - LIGHT (OPTION)
32 9910	2WD FRONT WHEEL AERODISK WITH 12MM HEX - WHITE (2)
36 9913	4WD/2WD REAR WHEEL AERODISK 12MM HEX - WHITE (2)

901312
SB M3x12

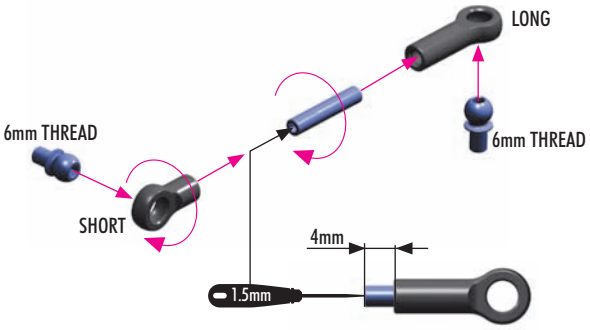

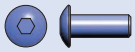

902308
SH M3x8

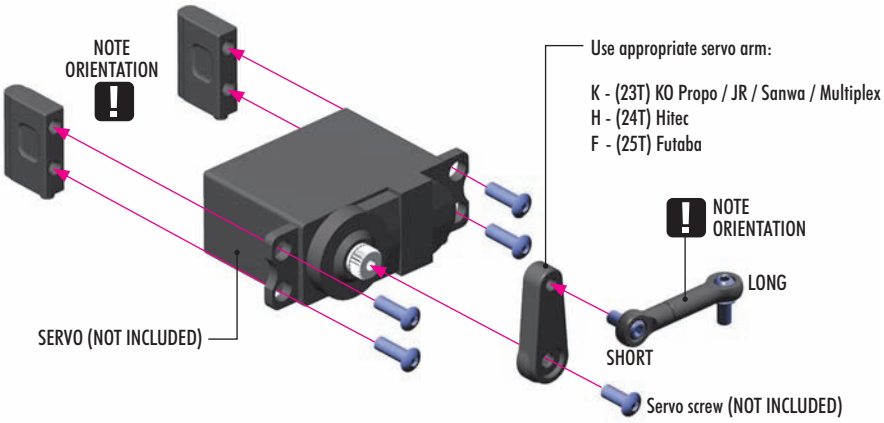

HUDY ALU SERVO HORNS	
#293497	23T
#293498	24T
#293499	25T

For more in-corner steering and better steering response, aluminum servo horns may be used.

303141
SHIM 3x5x1

903310
SFH M3x10

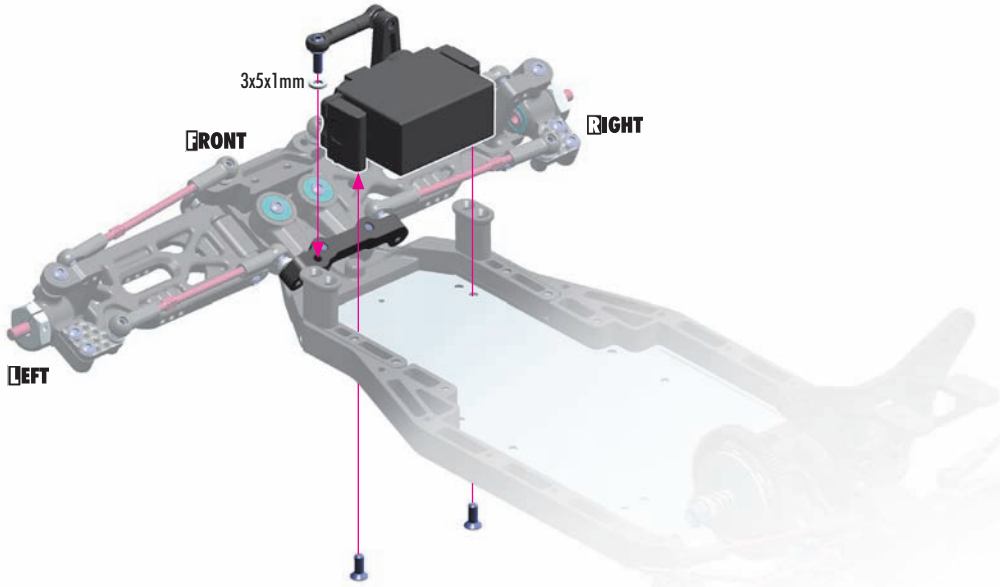

902310
SH M3x10

902312
SH M3x12

FRONT UPPER DECK		
#321160-M	MEDIUM	(INCLUDED)
#321160-H	HARD	(OPTION)

MEDIUM - for very-low, low and medium traction tracks. Generates more traction, absorbs bumps better.

HARD - for high & very-high traction tracks. Makes the car more precise.

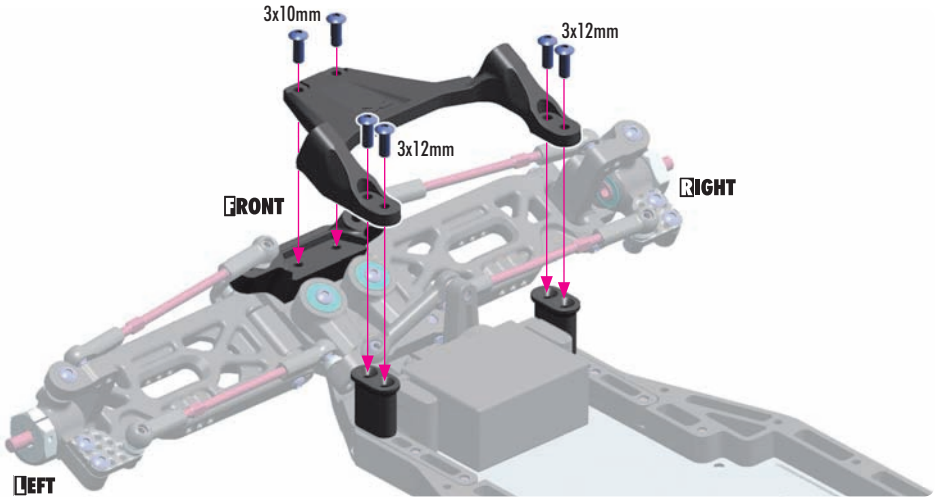

902312
SH M3x12

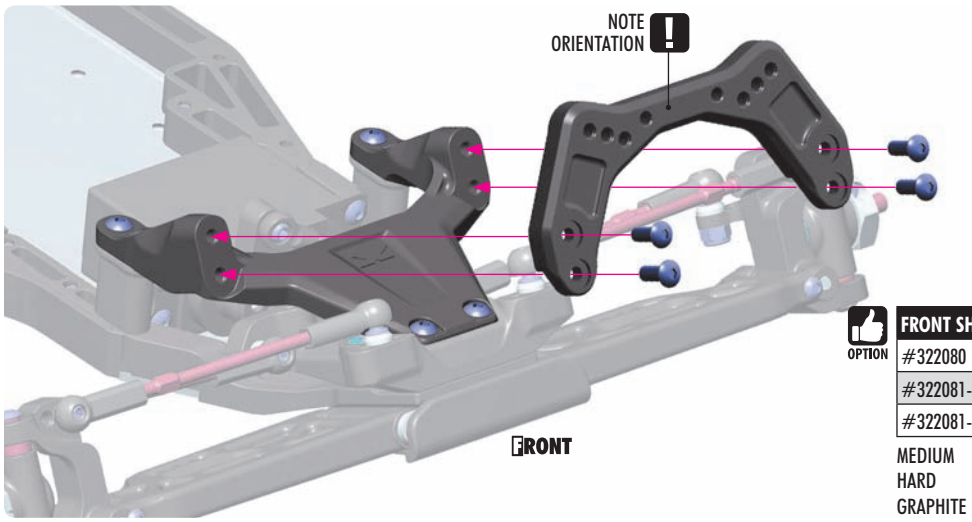

OPTION

FRONT SHOCK TOWERS		
#322080	GRAPHITE	(OPTION)
#322081-M	MEDIUM	(INCLUDED)
#322081-H	HARD	(OPTION)

MEDIUM - For very-low & low traction
HARD - For medium & high traction
GRAPHITE - For high & very-high traction

902322
SH M3x22

960030
NUT M3

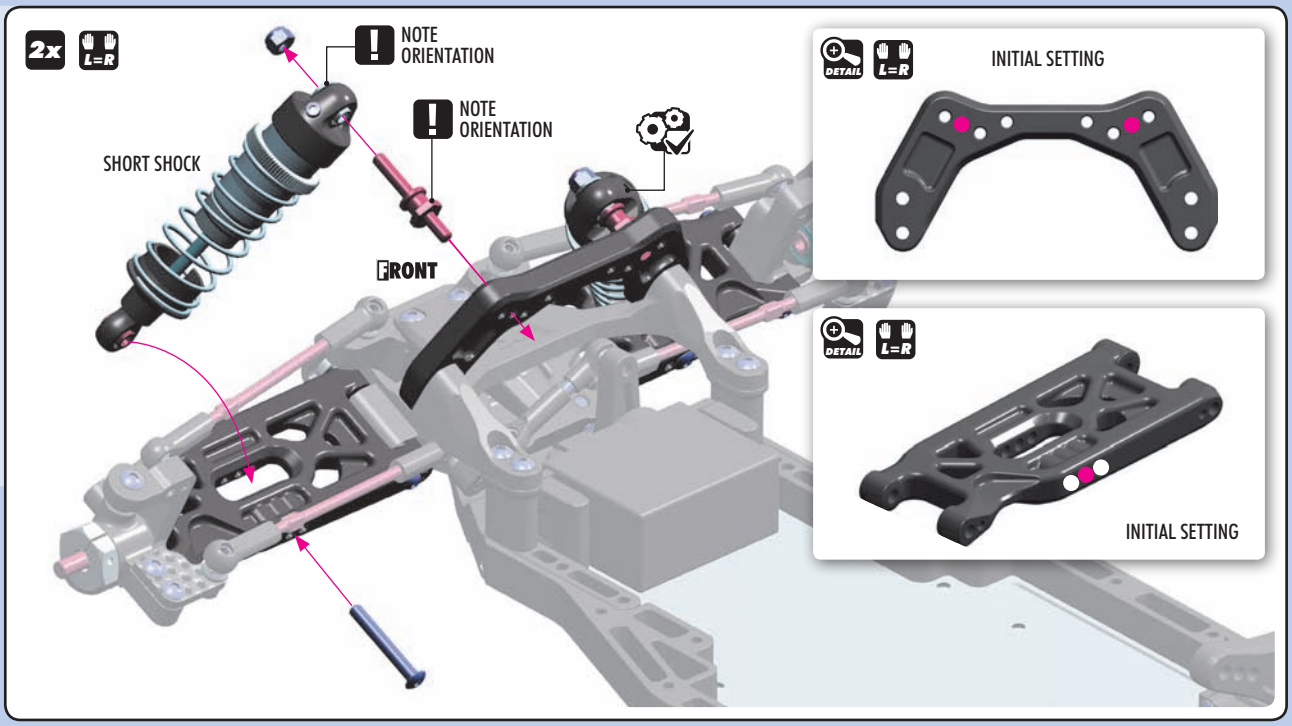

902312
SH M3x12

960030
NUT M3

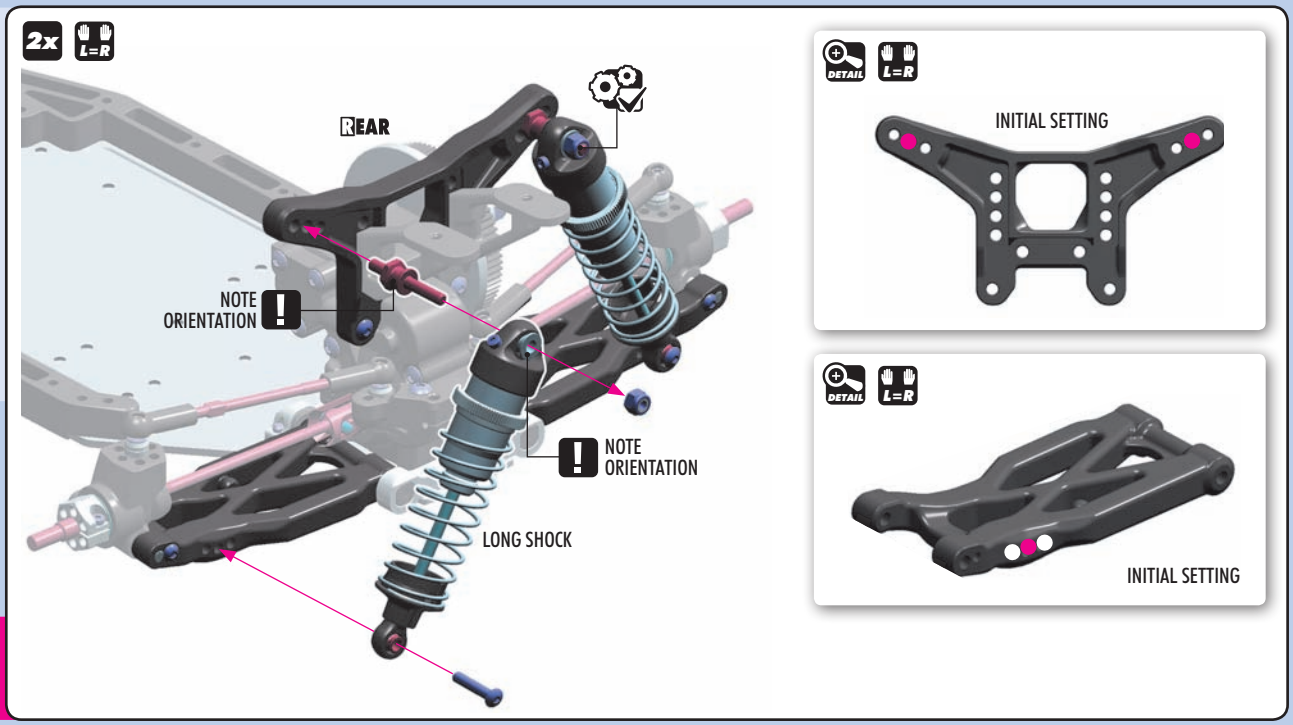

SET-UP BOOK
SHOCK POSITION

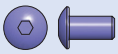

902306
SH M3x6

SET-UP BOOK
GEAR MESH

OPTION

XRAY PINIONS	
#365718	18T / 48P
#365719	19T / 48P
#365720	20T / 48P
#365721	21T / 48P
#365722	22T / 48P
#365723	23T / 48P

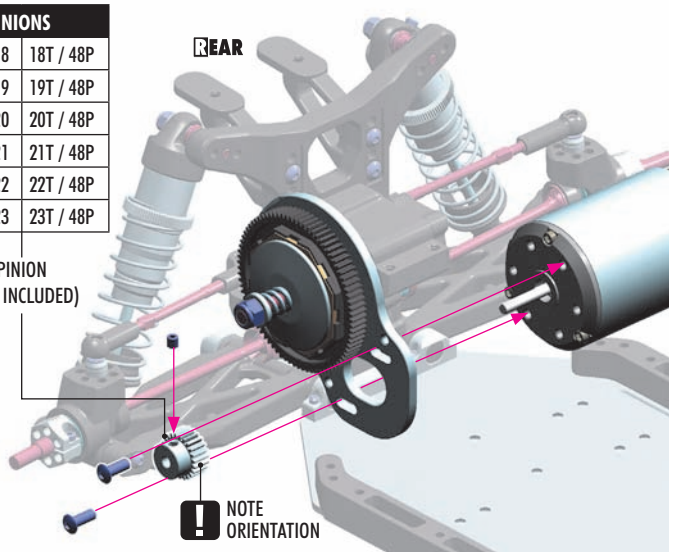

DETAIL

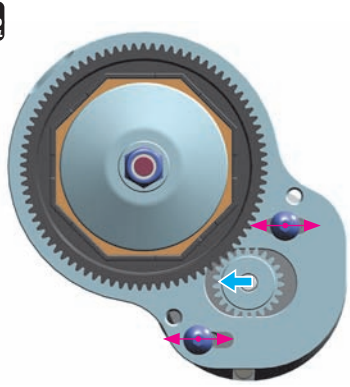

Adjust the motor so the pinion meshes with the spur gear properly. Make sure the gear mesh is not too tight.

There should be a small amount of play between the teeth of the pinion gear and the spur gear.

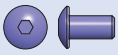

902306
SH M3x6

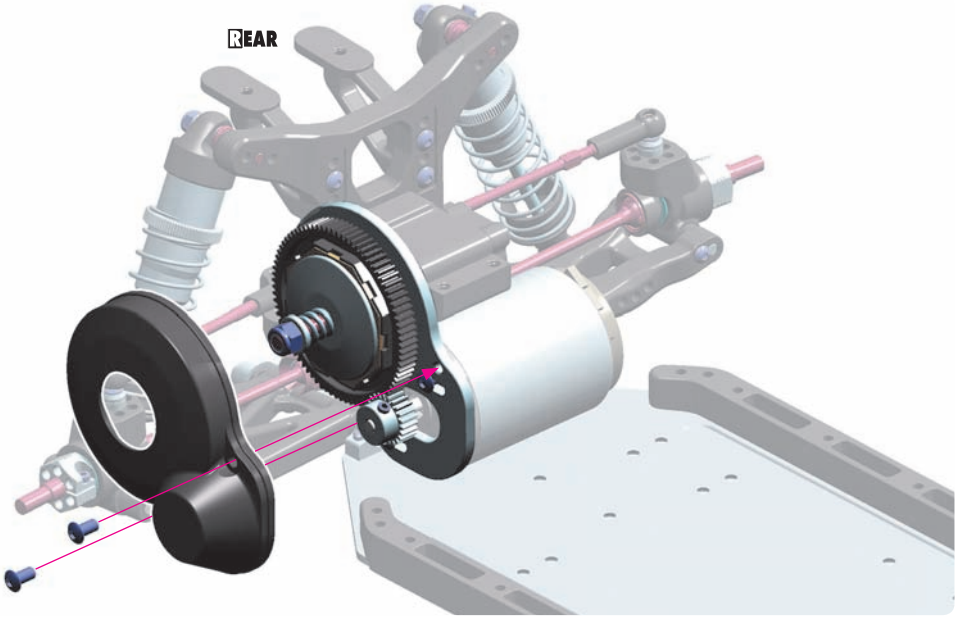

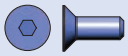

903308
SFH M3x8

903310
SFH M3x10

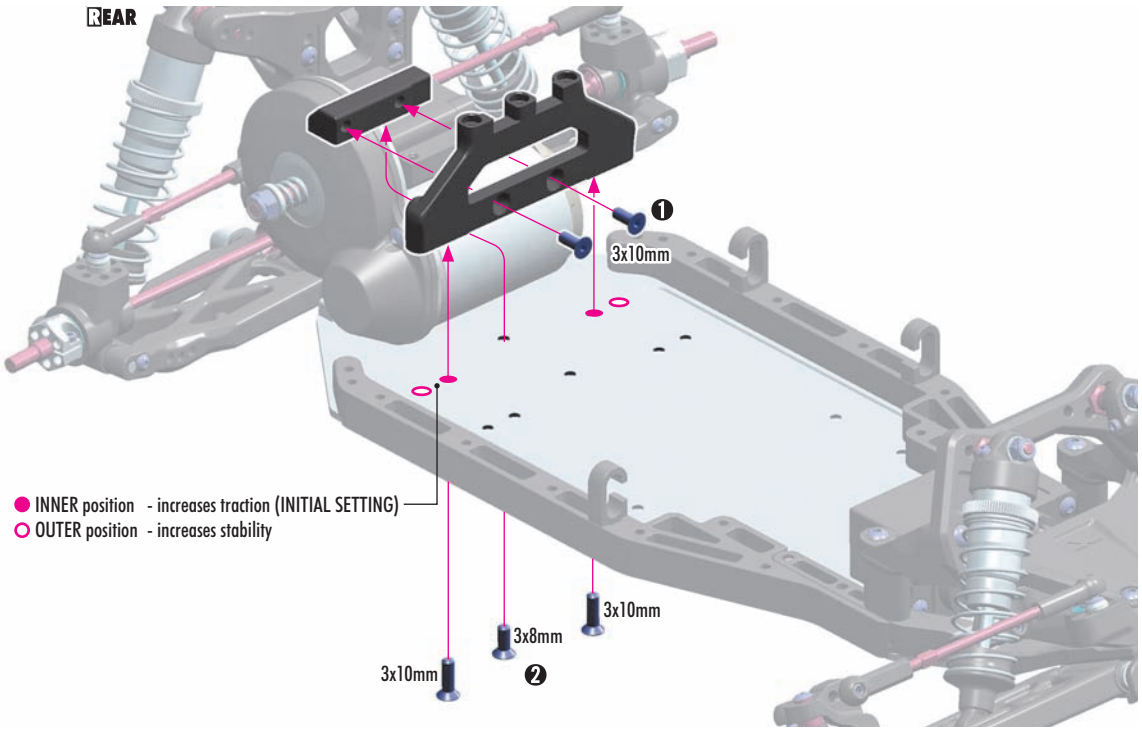

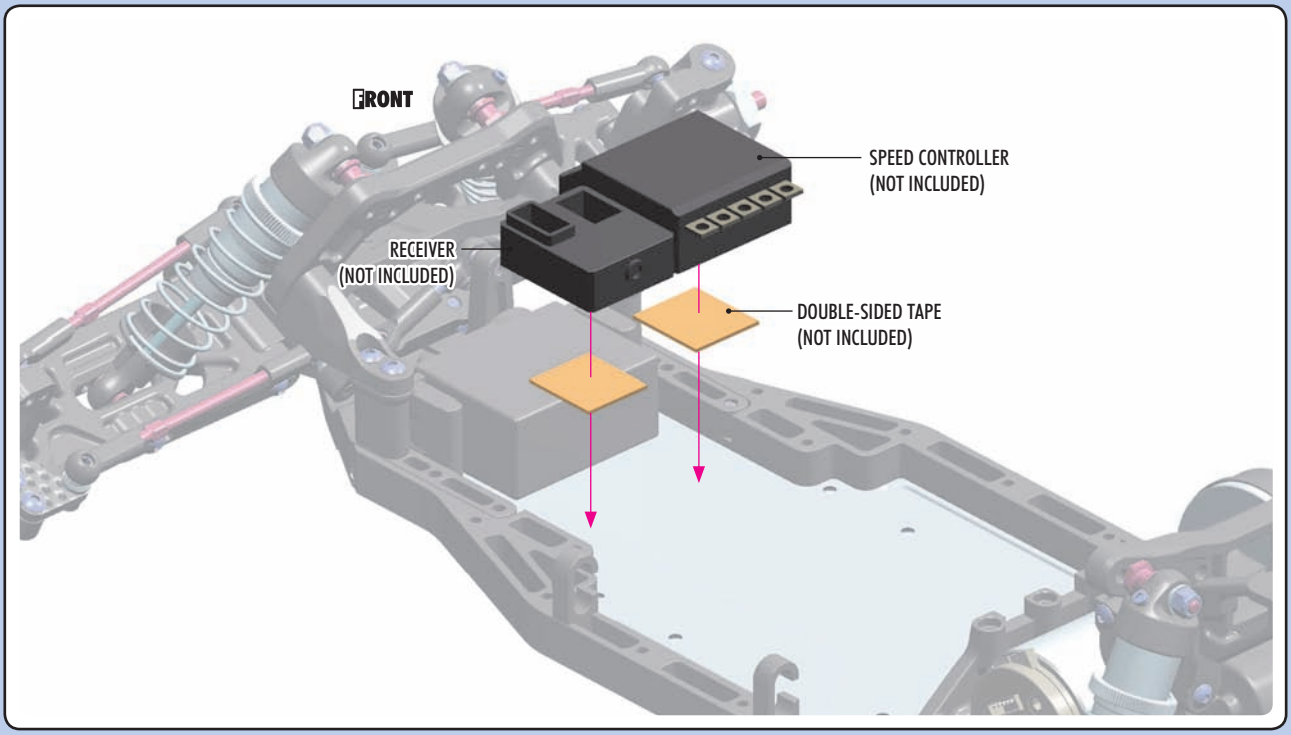
FRONT
SPEED CONTROLLER
(NOT INCLUDED)
RECEIVER
(NOT INCLUDED)
DOUBLE-SIDED TAPE
(NOT INCLUDED)


901310
SB M3x10
903310
SFH M3x10

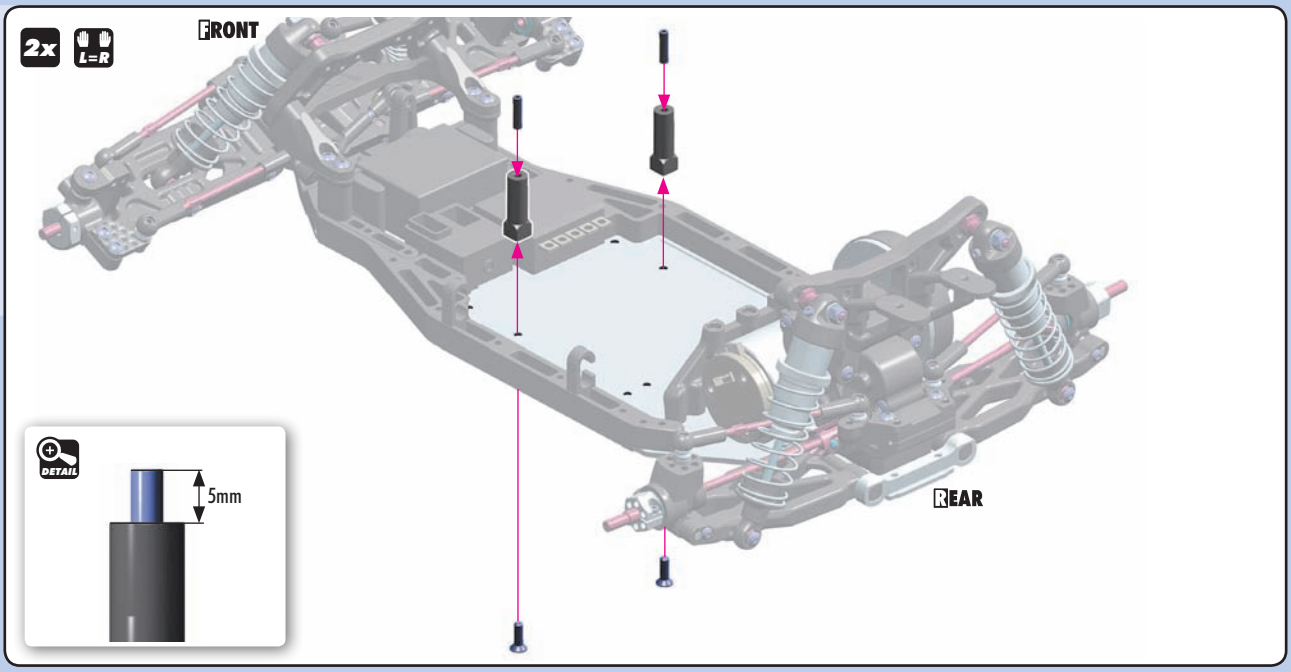
2x
L=R
FRONT
REAR
DETAIL
5mm

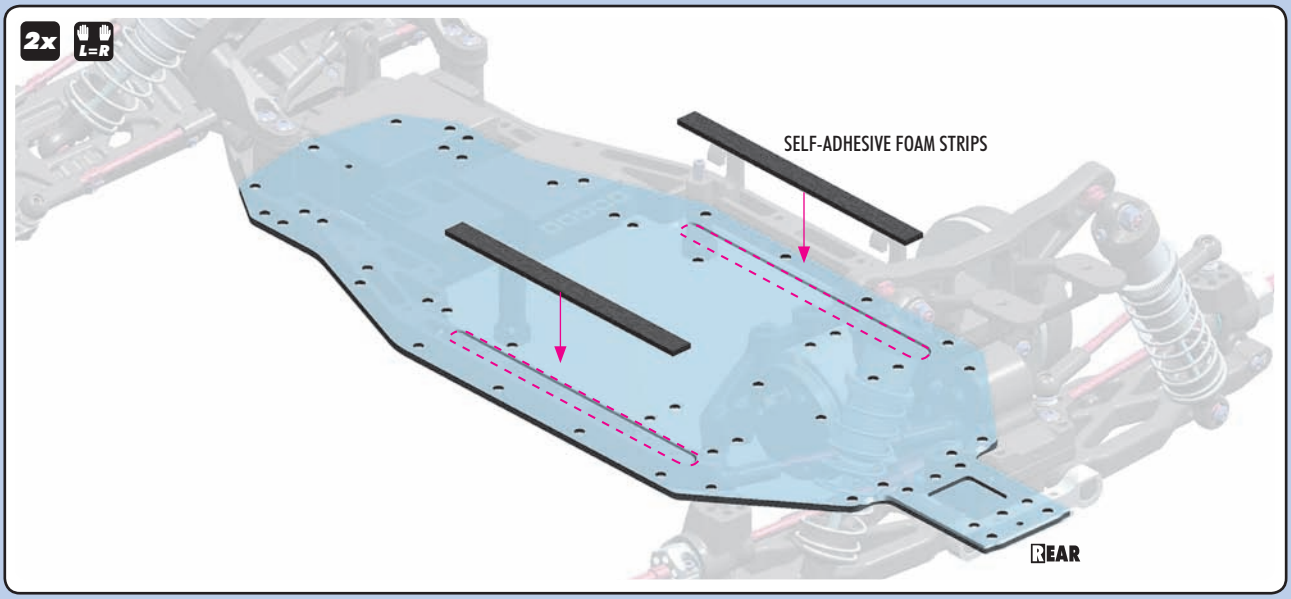
2x
L=R
SELF-ADHESIVE FOAM STRIPS
REAR


901304
SB M3x4


902310
SH M3x10


902312
SH M3x12

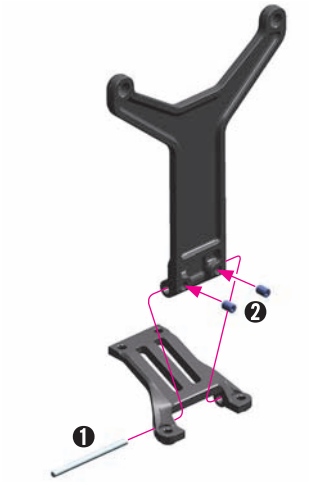

OPTION

BATTERY STRAP		
#326112-M	MEDIUM	(INCLUDED)
#326112-H	HARD	(OPTION)

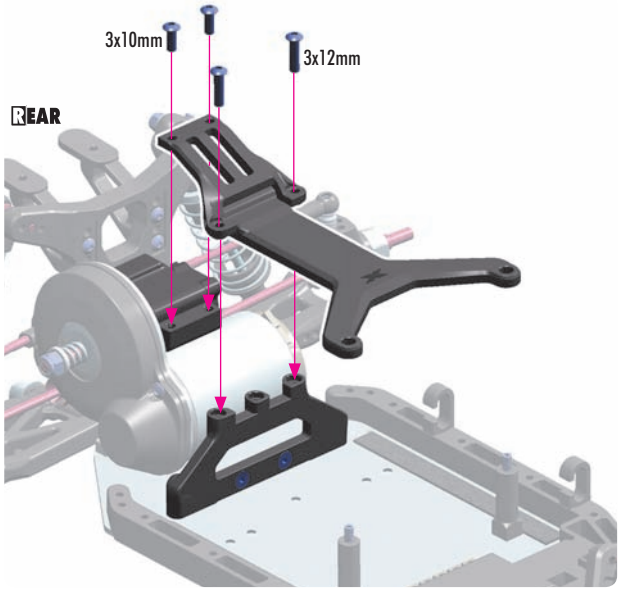

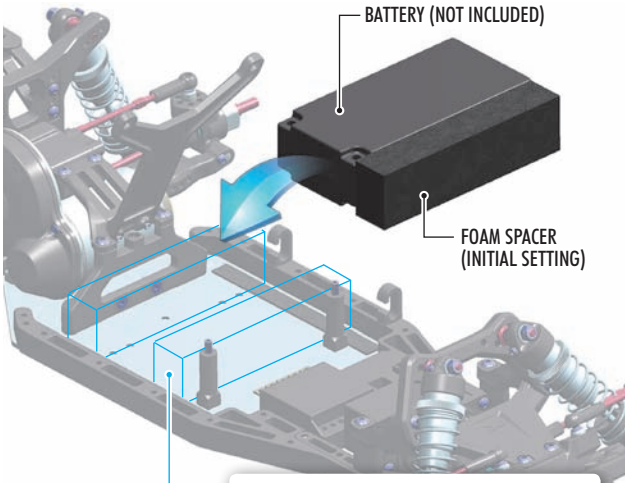

TIP

The foam battery spacer can be installed either in front or behind the battery.

REAR BATTERY POSITION:
more traction on rear supspension, less steering

FRONT BATTERY POSITION:
less traction on rear suspension, more corner speed

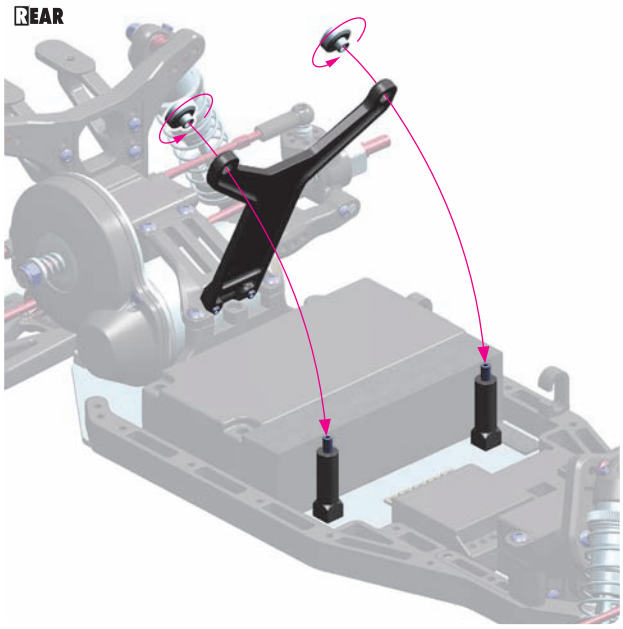

❶ Before cutting and making holes on the BODY, put the unpainted body on the chassis to confirm the mounting position and location for holes and cutouts. Before cutting and making holes on the WING, put the unpainted wing on the wing holders to confirm the mounting position and location for holes and cutouts.

❷ Before painting, wash the inside of the body with mild detergent, and then rinse and dry thoroughly.

❸ Mask all windows.

❹ Apply paint masks as appropriate.

❺ Paint the body using paints formulated for polycarbonate bodies.

❻ When the paint is dry, remove the masking.

❼ Carefully cut out the body using appropriate scissors or cutting tools.

❽ When you have finished cutting, peel off the external protective films.

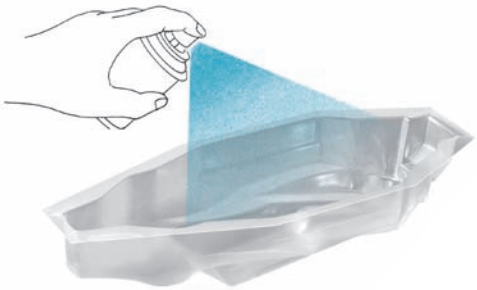

OPTION

LEXAN™ BODY		
#329700	0.75MM	(INCLUDED)
#329701	0.5MM LIGHT	(OPTION)

Cutting line for motor cover.

WING CUTTING LINE OPTIONS

❶ LESS TRACTION ❹ MORE TRACTION

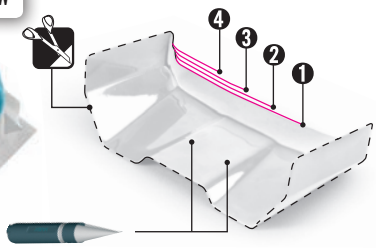

BODY REAMER (HUDY #107600)

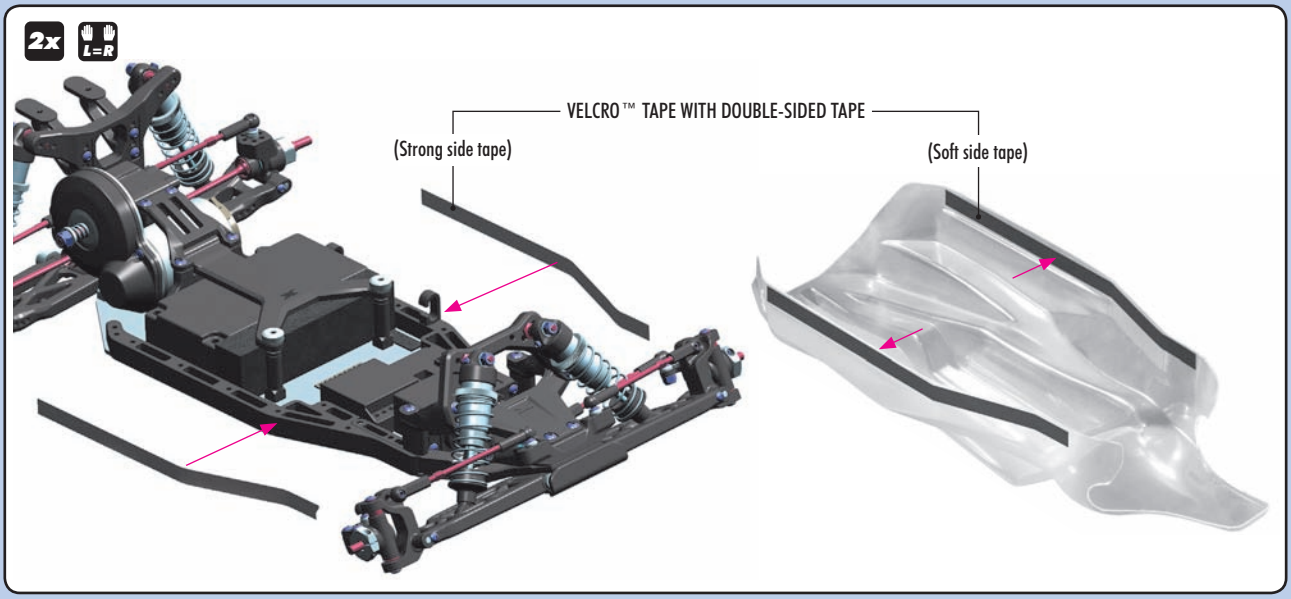

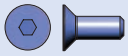

903308
SFH M3x8

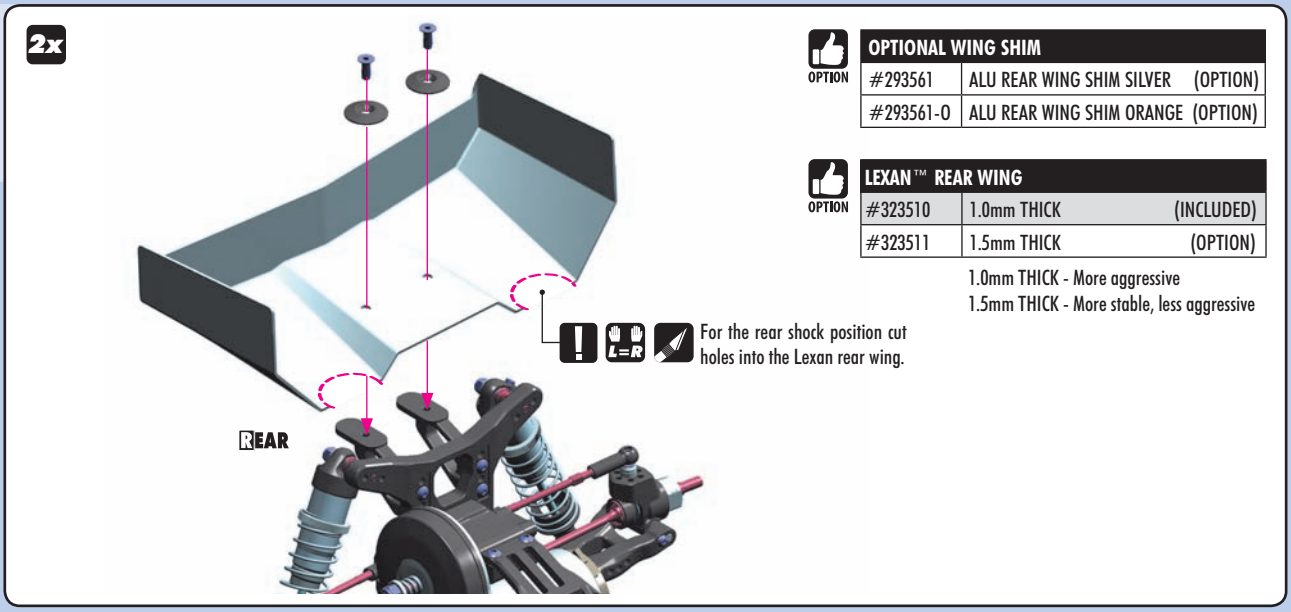

OPTION

OPTIONAL WING SHIM		
#293561	ALU REAR WING SHIM SILVER	(OPTION)
#293561-O	ALU REAR WING SHIM ORANGE	(OPTION)

OPTION

LEXAN™ REAR WING		
#323510	1.0mm THICK	(INCLUDED)
#323511	1.5mm THICK	(OPTION)

1.0mm THICK - More aggressive
1.5mm THICK - More stable, less aggressive

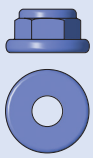

960240
N M4

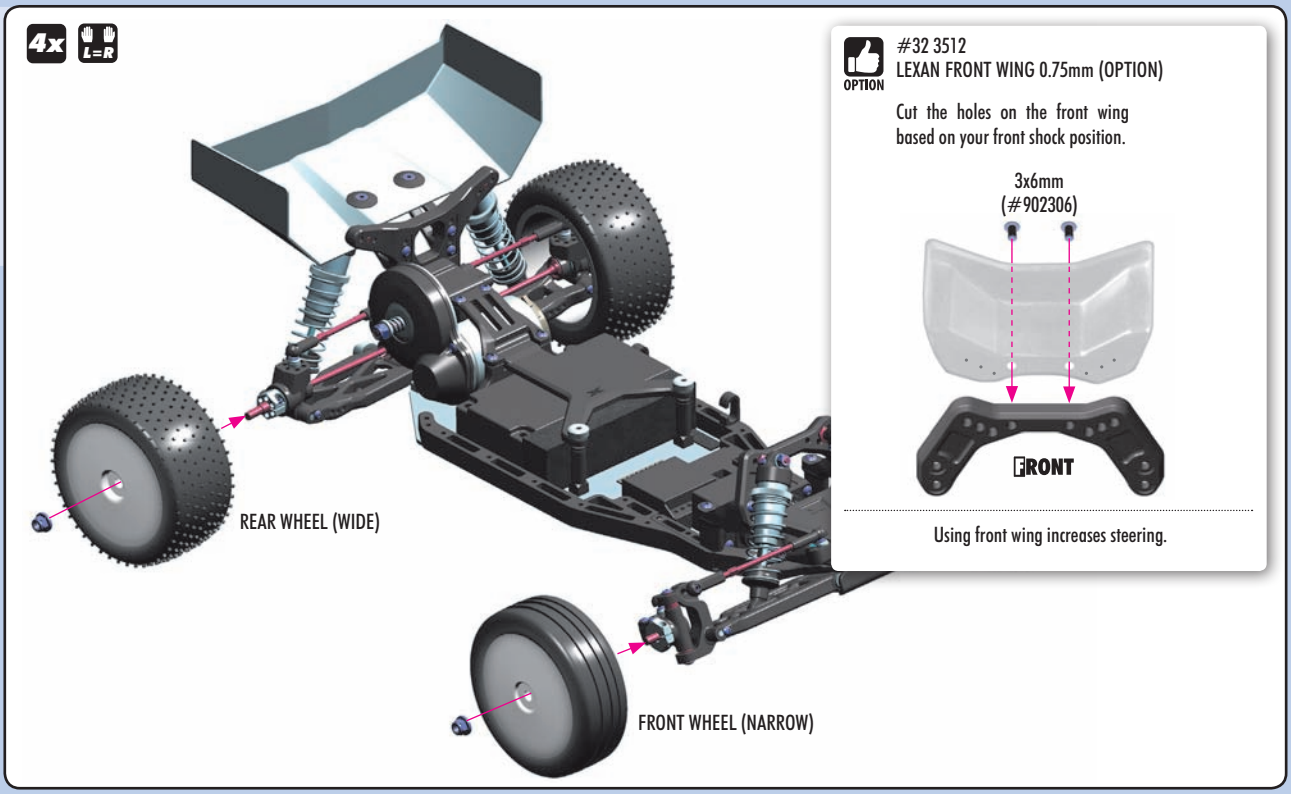

LEFT MOTOR POSITION ASSEMBLY

LEFT MOTOR POSITION ASSEMBLY

OPTION

Follow these steps to change your motor position to the LEFT side. Use the solidly-colored optional parts shown in the exploded view.

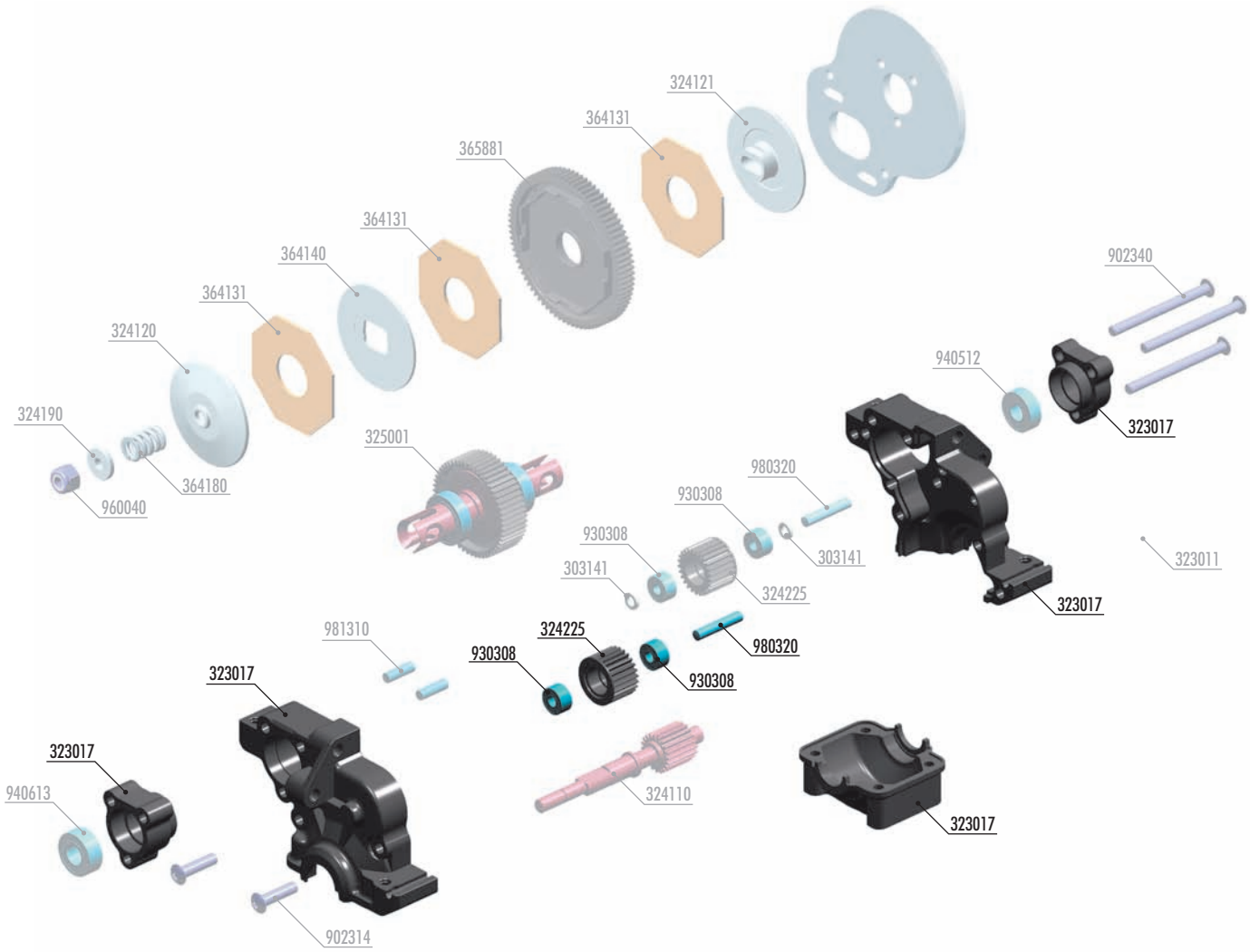

30 3141	ALU SHIM 3x5x1.0MM (10)
32 3017	**COMPOSITE MID MOTOR GEAR BOX (4 GEARS) - NARROW - SET**
32 4011	ALU MID & REAR MOTOR PLATE - SWISS 7075 T6 (3MM)
32 4110	ALU TOP SHAFT 20T - SWISS 7075 T6 - HARD COATED
32 4120	ALU 3-PAD SLIPPER CLUTCH PLATE - SWISS 7075 T6
32 4121	ALU 3-PAD SLIPPER CLUTCH PLATE WITH ADAPTER
32 4190	ALU 3-PAD SLIPPER CLUTCH SHIM
32 4225	**COMPOSITE GEAR 25T - GRAPHITE**
36 4131	SLIPPER CLUTCH PAD "SLS" - V2 (2)
36 4140	ALU 3-PAD SLIPPER CLUTCH PLATE DISC - 7075 T6
36 4180	SLIPPER CLUTCH SPRING C=30 - BLACK
36 5875	COMPOSITE 3-PAD SLIPPER CLUTCH SPUR GEAR 75T / 48 (OPTION)
36 5878	COMPOSITE 3-PAD SLIPPER CLUTCH SPUR GEAR 78T / 48 (OPTION)
36 5881	COMPOSITE 3-PAD SLIPPER CLUTCH SPUR GEAR 81T / 48
36 5884	COMPOSITE 3-PAD SLIPPER CLUTCH SPUR GEAR 84T / 48 (OPTION)
36 5887	COMPOSITE 3-PAD SLIPPER CLUTCH SPUR GEAR 87T / 48 (OPTION)
90 2314	HEX SCREW SH M3x14 (10)
90 2340	HEX SCREW SH M3x40 (10)
93 0308	**BALL-BEARING 3x8x4 (2)**
94 0512	HIGH-SPEED BALL-BEARING 5x12x4 RUBBER SEALED (2)
94 0613	HIGH-SPEED BALL-BEARING 6x13x5 RUBBER SEALED (2)
96 0040	NUT M4 (10)
98 0320	**PIN 3x20 (10)**
98 1310	PIN 3x10 (10)
32 5001	BALL ADJUSTABLE DIFFERENTIAL XH - SET - HUDY SPRING STEEL™

PAGE 9 / STEP 1

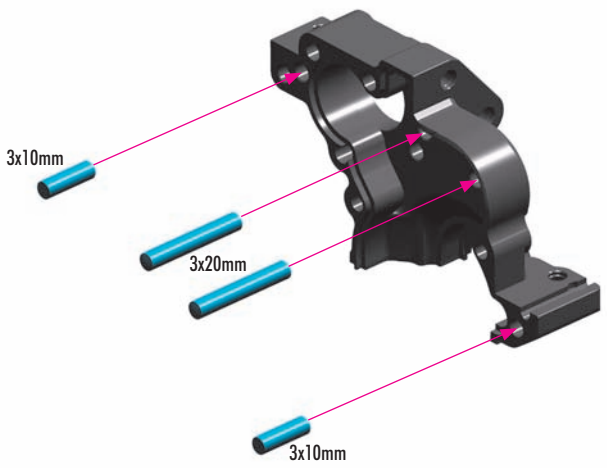

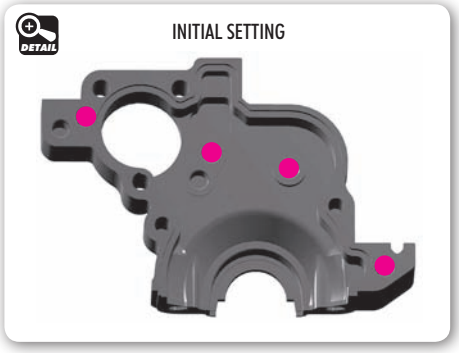

PAGE 10 / STEP 1

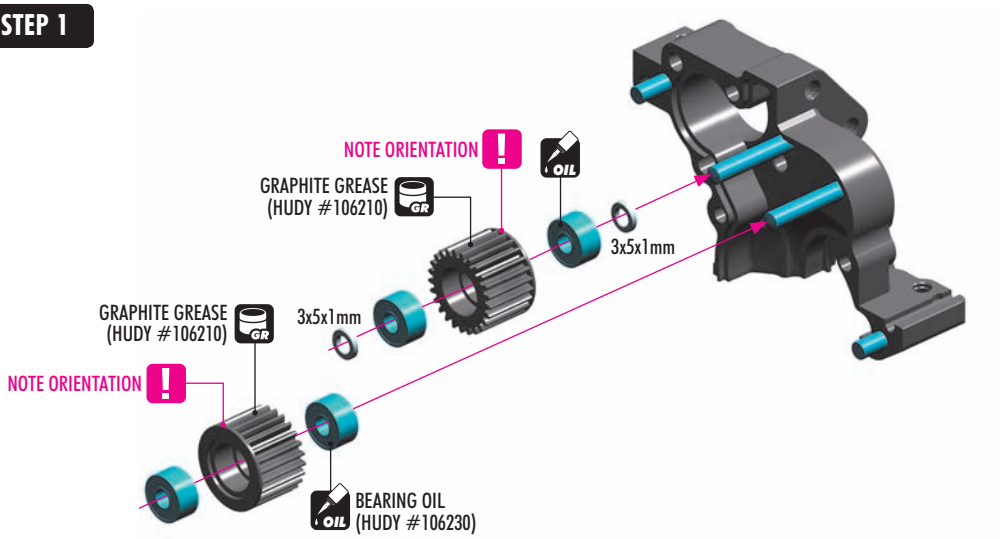

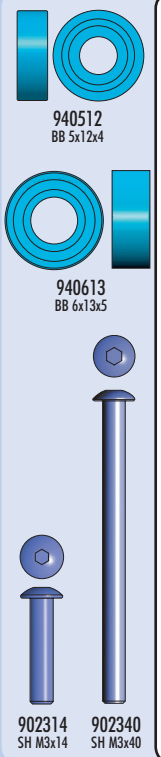

PAGE 10 / STEP 2

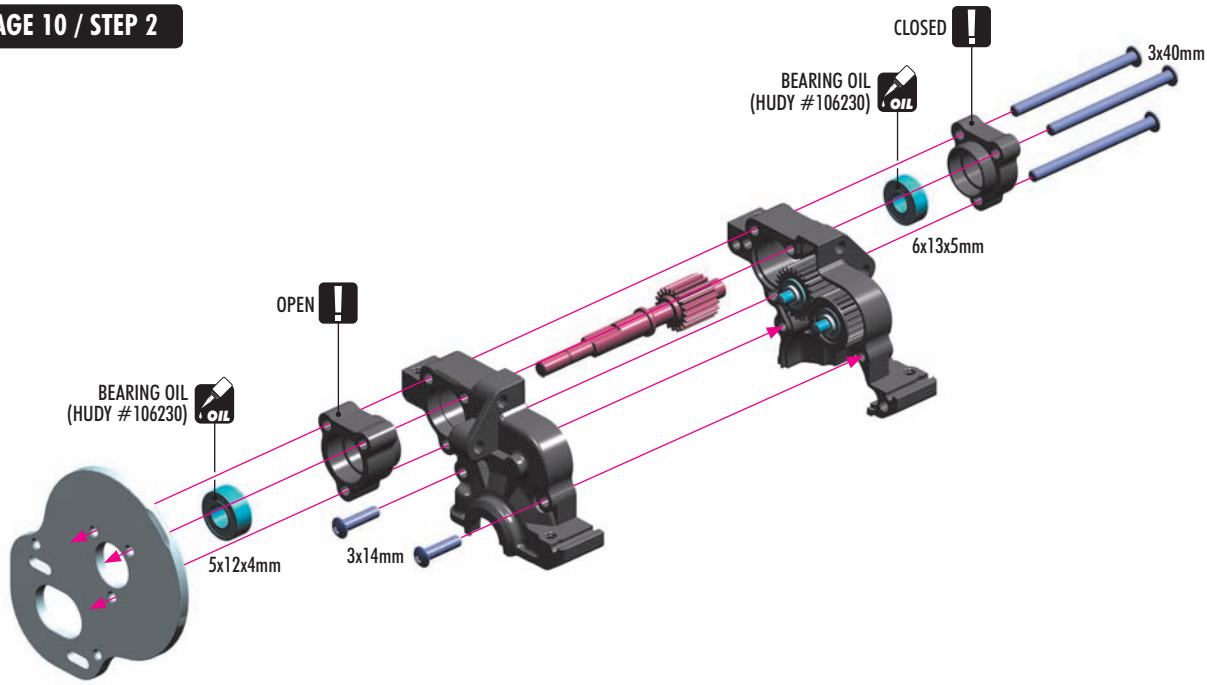

PAGE 10 / STEP 3

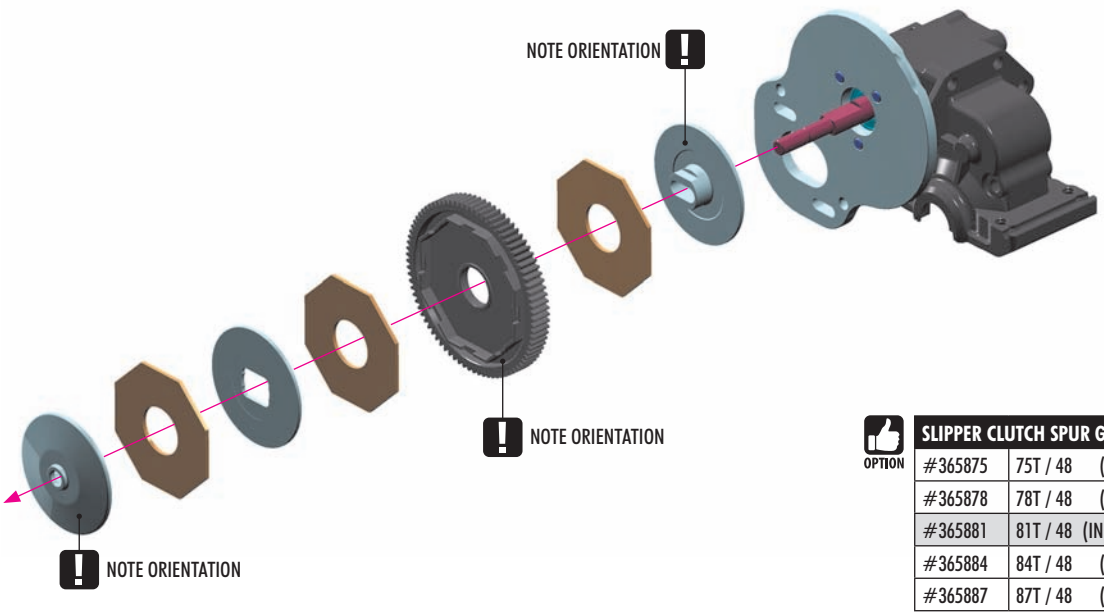

OPTION

SLIPPER CLUTCH SPUR GEARS		
#365875	75T / 48	(OPTION)
#365878	78T / 48	(OPTION)
#365881	81T / 48	(INCLUDED)
#365884	84T / 48	(OPTION)
#365887	87T / 48	(OPTION)

SET-UP BOOK
SLIPPER CLUTCH

PAGE 31 / STEP 1

902306
SH M3x6

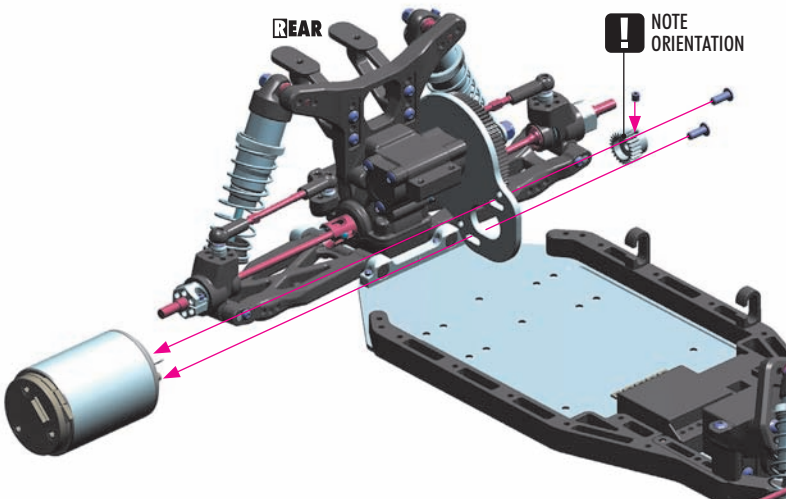

DETAIL

Adjust the motor so the pinion meshes with the spur gear properly. Make sure the gear mesh is not too tight.

There should be a small amount of play between the teeth of the pinion gear and the spur gear.

SET-UP BOOK
GEAR MESH

PAGE 31 / STEP 2

902306
SH M3x6

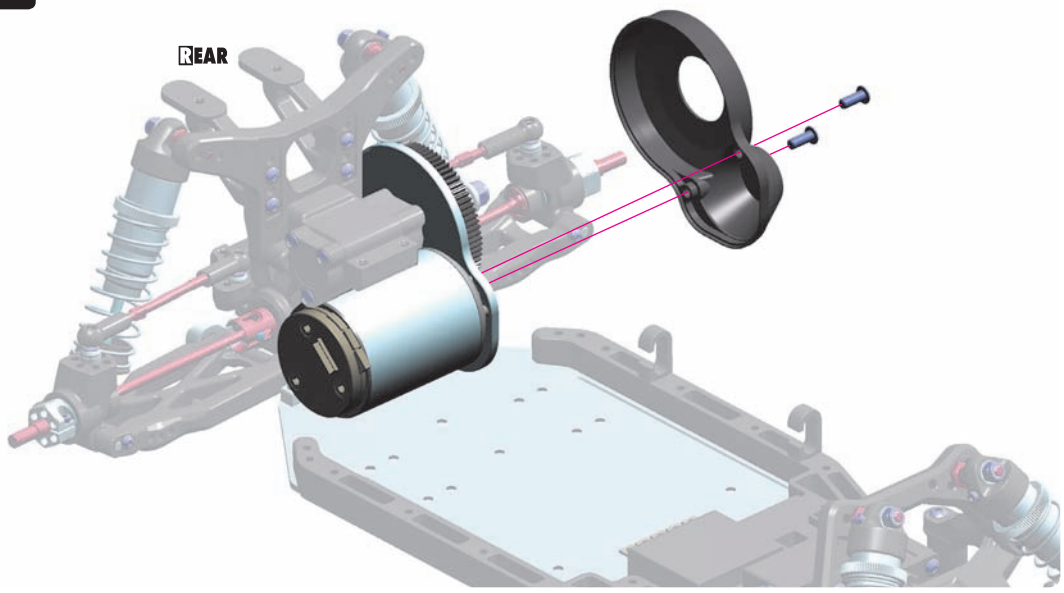

SET-UP SHEET

XRAY XB2

RACE			
TRACK			
NAME		DATE	

LAPS		BEST LAP TIME	sec
QUALIFYING POSITION		FINAL POSITION	

TRACK

SIZE	☐ OPEN	☐ MEDIUM	☐ TIGHT
TRACTION	☐ ☐ ☐ ☐ ☐ ☐ ☐ ☐ ☐		
	VERY-LOW	MEDIUM	VERY-HIGH
SURFACE	☐ SMOOTH	☐ MEDIUM	☐ BUMPY
TYPE	☐ CLAY	☐ CARPET	☐ ASTRO
CONDITION	☐ BLUE GROOVE	☐ HARD PACKED	☐ DRY
	☐ DUSTY	☐ LOAMY	☐ WET

TRANSMISSION

DIFFERENTIAL	BALL DIFF ☐	☐ GEAR DIFF	OIL cSt
SATELITE GEARS	COMPOSITE ☐	☐ STEEL	
SLIPPER	ADJUSTMENT		mm

GEARING

PINION	T	SPUR GEAR	T

SHOCKS

FRONT	SHOCKS	REAR
	SPRINGS	
cSt	OIL	cSt
%	REBOUND	%
	PISTONS	
☐ 2 HOLES	ø1.2mm ☐	☐ 2 HOLES
☐ 3 HOLES	ø1.3mm ☐	☐ 3 HOLES
☐ 6 HOLES	ø1.4mm ☐	☐ 6 HOLES
HOLES	ø1.6mm ☐	HOLES
	ø1.7mm ☐	
	ø mm ø mm	
DOWNSTOP SHIM mm (INSERT UNDER PISTON)		DOWNSTOP SHIM mm (INSERT UNDER PISTON)
LENGTH mm		LENGTH mm
UPSTOP SHIM mm (INSERT ABOVE COLLAR)		UPSTOP SHIM mm (INSERT ABOVE COLLAR)
KIT	BALL JOINT	KIT

SHOCK TOWER

FRONT	SHOCK TOWER	REAR
GRAPHITE ☐ ☐ COMPOSITE		GRAPHITE ☐ ☐ COMPOSITE

REAR ANTI ROLL BAR

YES ☐ ☐ NO — THICKNESS — mm

TIRES

FRONT	TIRES	REAR
	TYPE	
	INSERTS	
	WHEELS	

ELECTRONICS

MOTOR	
SPEEDO	
BATTERIES	

ELECTRONICS LAYOUT

MOTOR POSITION	☐ FRONT	☐ MIDDLE	☐ REAR
	☐ LEFT	☐ RIGHT	
BATTERY POSITION	☐ FRONT	☐ MIDDLE	☐ REAR

BODY

STANDARD ☐ ☐ LIGHT OTHER

FRONT — APPLIED ◉ ☒ APPLIED — REAR

STEERING BLOCK: MEDIUM ☐ HARD ☐

LONGER BUSHINGS: UP ☐ DOWN ☐

SHIM mm

CASTER BLOCK: MEDIUM ☐ HARD ☐

CAMBER LINK LOCATION 2 1

UPPER SHOCK POSITION 3 2 1

LOWER SHOCK POSITION 3 2 1

DRIVE SHAFT: CVD ☐ ECS ☐

SHIM mm

SHIM mm

UPPER SHOCK POSITION 1 2 3

LOWER SHOCK POSITION 1 2 3

REAR UPRIGHT (FRONT / REAR): MEDIUM ☐ HARD ☐ ALU ☐

CASTER BUSHINGS: 0° ☐ 2.5° ☐ 5° ☐

CASTER

FRONT WING: YES ☐ ☐ NO

KICK-UP ANGLE: KIT 26° ☐

BUMP STEER SHIM mm (STEERING BUMP STEER)

FRONT

WING CUTTING LINE: 1 2 3 4

SHOCK POSITION: FRONT ☐ ☐ REAR

WING TYPE: 1.0mm THICK ☐ 1.5mm THICK ☐

WING POSITION: UP ☐ DOWN ☐

REAR

FRONT TOE ° OUT

OFFSET

WHEELBASE SHIM: 0mm ☐ ☐ 1mm (IN FRONT OF ARM)

ROLL CENTER HOLDER: MEDIUM ☐ HARD ☐ ALU ☐

UPPER DECK: MEDIUM ☐ HARD ☐

ROLL CENTER 3 2 1

EXTENSION: 0 SLOTS ☐ 1 SLOT ☐ 2 SLOTS ☐

SIDE GUARD: MEDIUM ☐ HARD ☐

SIDE BRACE: GRAPHITE ☐

BATTERY STRAP: COMPOSITE ☐ GRAPHITE ☐

FLEX LINKAGE: YES ☐ ☐ NO

REAR TOE ° IN

WHEELBASE SHIM: ☐ 0mm ☐ 1mm ☐ 2mm (IN FRONT OF ARM)

UPPER BRACE: KIT ☐

UPPER BRACE SCREW

SCREW: YES ☐ ☐ NO (MOTOR MOUNT BRACE SCREW)

OFFSET

ROLL CENTER 2 1

ROLL CENTER HOLDER: COMPOSITE ☐ ALU ☐

SHIMS mm (ACKERMANN LEFT = RIGHT)

STEERING ARMS: COMPOSITE ☐ ALU ☐

BUMP STEER SHIM mm (LEFT = RIGHT)

SHIMS mm

STEERING PLATE: COMPOSITE ☐ ALU ☐

ROLL CENTER ECCENTRIC BUSHINGS

0.5° ☐ 1° ☐ RF

0.5° ☐ 1° ☐ RR

SUSP. HOLDERS: NARROW ☐ WIDE ☐

FRONT CAMBER °

FRONT ARM: MEDIUM ☐ HARD ☐ GRAPHITE ☐

RIDE HEIGHT mm

RIDE HEIGHT #107721 GAUGE

REAR CAMBER °

RIDE HEIGHT mm

REAR ARM: MEDIUM ☐ HARD ☐ GRAPHITE ☐

SERVO WEIGHT: STANDARD ☐ ☐ LOW PROFILE

CHASSIS BRACE: MEDIUM ☐ HARD ☐

1 2 3 SERVO POSITION

BALANCE g

BALANCE g

ARM MOUNT: COMPOSITE ☐ ALU ☐ BRASS ☐

CHASSIS: ALU ☐ ALU FLEX ☐ GRAPHITE ☐

CHASSIS FLEX: SCREW USED / SCREW NOT USED

www.teamxray.com

XRAY EUROPE

XRAY, K VÝSTAVISKU 6992, 91101 TRENCIN, SLOVAKIA, EUROPE
PHONE: +421-32-740 11 00, FAX: +421-32-740 11 09, info@teamxray.com

XRAY USA

RC AMERICA, 2030 Century Center Blvd #15, Irving, TX 75062, USA
PHONE: 214-744-2400, FAX: 214-744-2401, xray@rcamerica.com

MADE IN SLOVAKIA EUROPE

/TeamXray /TeamXray /TeamXray /XrayRacing /+TeamXrayRC