TEKNO RC EB410

Driver: Mike keyes **Date:** 16/12/2017

Track: Keilor Melbourne **Event:**

Track Conditions

Composition: ☐ Astotruf ☐ Carpet ☑ Clay ☑ Dirt ☐ Grass ☐ Soft Dirt ☐:

Traction: ☑ Low ☑ Medium ☐ High **Size:** ☐ Small ☑ Medium ☐ Large **Environment:** ☐ Indoor ☑ Outdoor

Condition: ☐ Dry ☑ Dusty ☐ Wet ☐ Muddy **Surface:** ☐ Smooth ☐ Bumpy ☐ Rutted

FRONT SUSPENSION

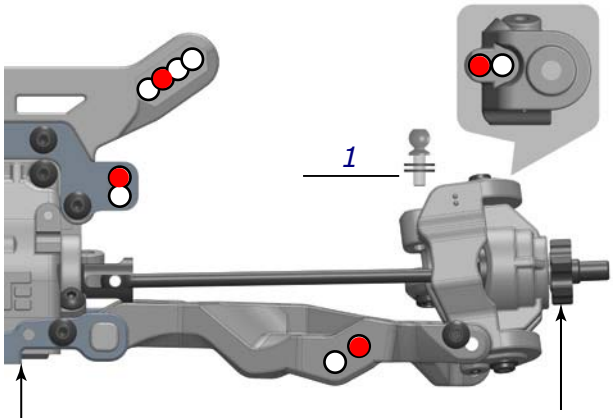

Bumpsteer Shim: 1

Ackermann Shim: 4

Steering Stop Shim: 2

Ride Height: 18mm Hex: +1

Camber: -1 Caster: Kit -15 Toe: Out 1

Kick-up: 0-kit Sweep: 0-kit Droop: 18.60mm

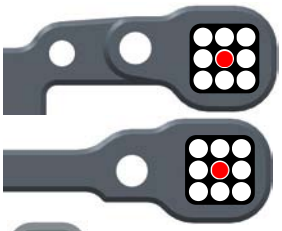

A Block (Center Dot Insert = 0°)

B Block (Center Dot Insert = 10°)

Wheelbase

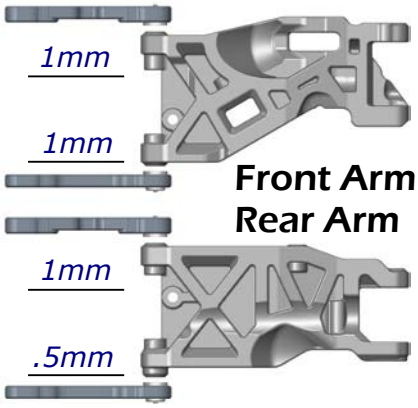

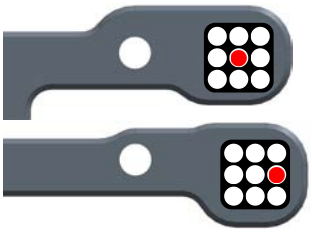

C Block (Center Dot Insert = 2°)

D Block (Center Dot Insert = 1.5°)

REAR SUSPENSION

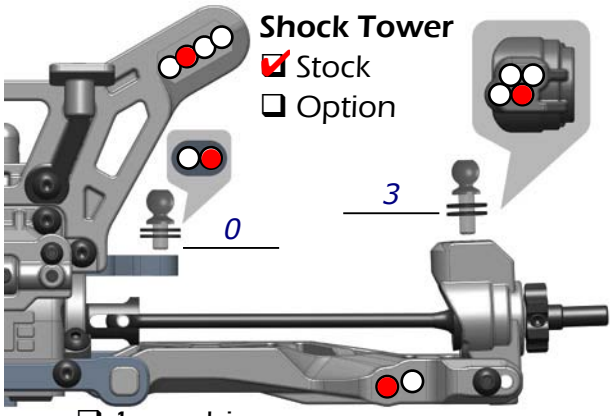

Shock Tower

☑ Stock

☐ Option

Camber: -1

Toe: 2.5

Anti-Squat: 2- kit

Droop: 26.45mm

Ride Height: 21mm

Hex: Kit

Chassis Brace

☑ Short Rear

☐ Long Rear

☐ 1mm shim

☐ 2mm shim ☑ No Shim

ANTI-ROLL BAR

Front: 3 dot Rear: 4 dot kit

DIFFERENTIAL

Arn0 / PetitRC.com

Front: 7000 Center: 200.000 Rear: 5000

AERODYNAMICS

Body: Kit

Wing: Kit

Lip: In cut

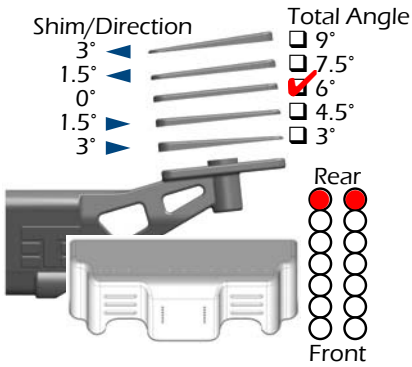

TIRES

Fr Tire: P/L hole shot

Fr Insert: Open cell

Fr Wheel: AE B64D

Rr Tire: P/L hole shot

Rr Insert: Open cell

Rr Wheel: AE B64D

SHOCKS

FRONT		REAR
Red	Spring	Red
Losi 40w	Oil	Losi 35w
1.7 kit	Piston	1.8 kit
TLR5096	Limiters	TLR5096
0%	Rebound	0%
Emul	Build	Emul

ELECTRONICS

Motor: 5.5 turn Battery: R1 6000

Pinion: 22 AE Spur: 81 kit

ESC: Orion

Servo: Ko-propo Radio: Sanwa

Big improvement. thanks to insight from local fast guys Simon and ray. Buggy is a missile . Only run a 22 pinion if you have a pro esc with fan . Lunsford ti turnbuckles. Protek ti screws . C/F battery strap and diff top plate .full size servo. Use only short rear brace . Droop must be correct . 2.5 rear toe is great for low bite conditions.

NOTES