S14-3 SETUP SHEET

1/10 Off Road Racing Electric Buggy

Name: Olives **Date:** 06-2020

City/Track: AEC MAison Alfort

Event:

Conditions: ☐ Indoor ☑ Outdoor ☐ Dry ☐ Wet ☐ Blue Groove ☐ Hard Packed

Composition: ☑ Astroturf ☐ Clay ☐ Carpet ☐ Dirt ☐ Grass ☐ Other:

Size: ☐ Open ☑ Medium ☐ Tight **Traction:** ☑ High ☐ Medium ☐ Low **Surface:** ☐ Smooth ☑ Medium ☐ Bumpy

Diff. Oil

Front: 10k Center: slipper Rear: 7k

Tire & Inserts

	Front	Rear
Tire:	Mini Dart Yellow	Mini Dart Yellow
Insert:	Aka	Schum Medium

Notes: Cut both border front tyre pin

Electronics

Motor: Ws Line 5.0 Spur/Pinion: 18 /81

Battery: Rc Concept HV 6000

Battery Position: Forward

ESC: LRP X Flow

ESC settings: 5-9-3-2-2-5-2-2-0

Servo: 1257 TG Savox Receiver: RX482

Front Suspension

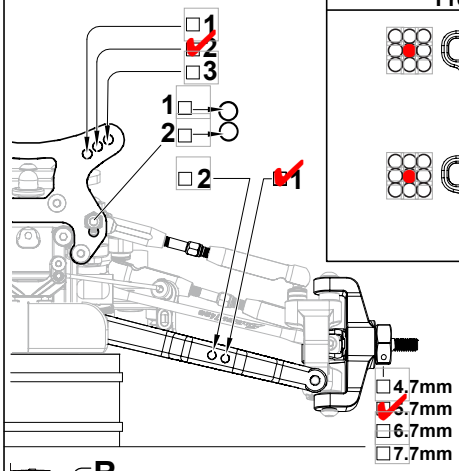

Front in-Board Toe

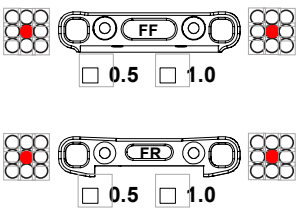

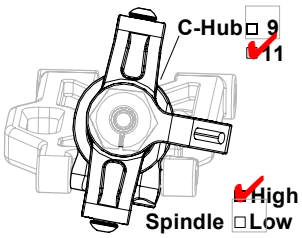

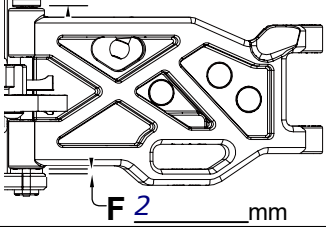

Front lower arm
☑ Pro-composite Hard
☐ Standard

Ackermann

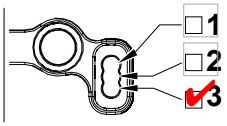

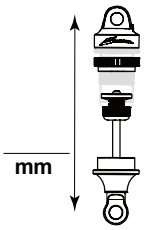

Oil 600
Piston 1,6 mm
Spring 3 dot
Limiter
Stroke
Notes

Track Width
Caster Hex 4,7mm
Camber -1
Toe +1
Rebound Stop 0
Ride Height 15 mm
Sway Bar 2 mm

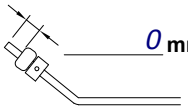

Comments

Body Kit Wing Kit

Rear Suspension

Rear lower arm
☑ Pro-composite Hard
☐ Standard

Rear Toe-In

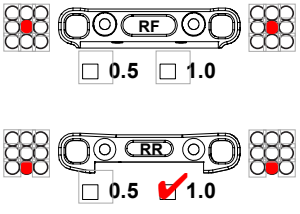

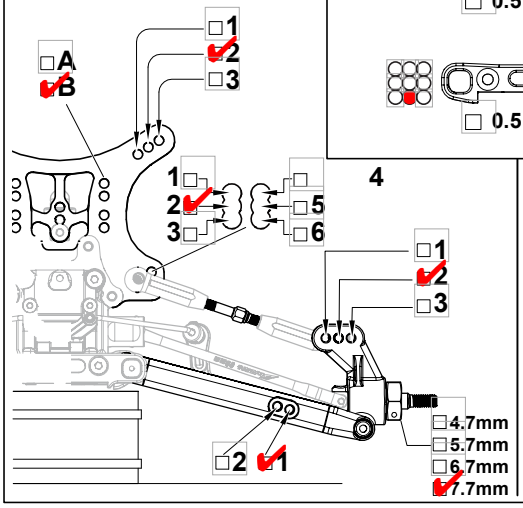

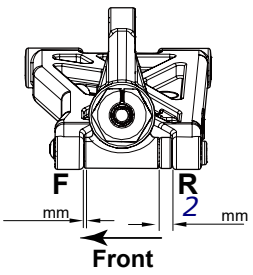

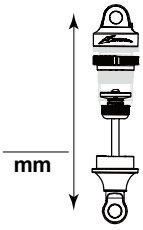

Oil 450
Piston 1,7 mm
Spring 2 dot
Limiter
Stroke
Notes

Track Width Hex 7,7mm
Camber -1
Rebound Stop 0
Ride Height 15 mm
Sway Bar 1,8 mm

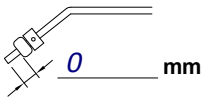

Comments

Others

Arn0 - PetitRC.com

Side guard	☐ Pro-Composite Hard	☑ Standard
Front T-bar	☑ Pro-Composite Hard	☐ Standard
Rear T- Bar	☑ Pro-Composite Hard	☐ Standard

Comments