# S121M Setup Sheet

**Name:** David Orbell **Date:** 14/10/17
**City/Track:** Silverstone indoors
**Event:** rd 1 winter series

**Conditions:** ☑ Indoor ☐ Outdoor ☑ Dry ☐ Wet ☐ Blue Groove ☐ Hard Packed
**Composition:** ☐ Astroturf ☐ Clay ☑ Carpet ☐ Dirt ☐ Grass ☐ Other: _____
**Size:** ☐ Open ☑ Medium ☑ Tight **Traction:** ☑ High ☐ Medium ☐ Low **Surface:** ☑ Smooth ☐ Medium ☐ Bumpy

## Differential
☐ Ball: _____ ☑ Gear - Oil: 15,000

## Tire & Inserts

| | Front | Rear |
|---|---|---|
| Tire: | yellow cut staggers | cactus |
| Insert: | | standard mr'o' racing rear |

Notes: _____

## Electronics
Motor: 7.5t Spur/Pinion: 76/26
Battery: 7.4v shorty
Battery Position: behind servo
ESC: hobbywing v3.1
ESC settings: _____
Servo: _____ Receiver: _____

## Front Suspension

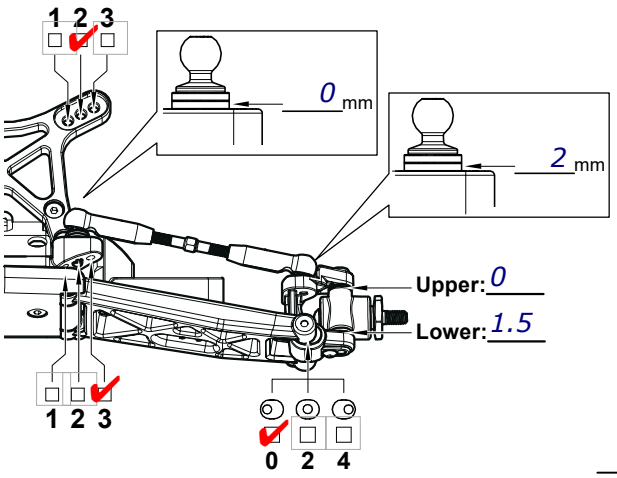


**Camber:** -2deg
**Toe:** 0
**Ride Height:** 15

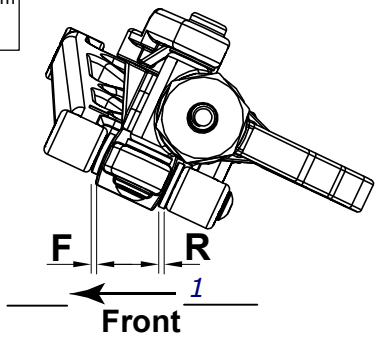


**Front Shocks**
Oil: 30wt losi
Piston: 2x 1.6mm
Spring: 3.75ib/in
Preload: _____
Limiter - In: 0 Out: 0

Notes:
front wing fitted

Steering rack flipped to minimise Ackerman

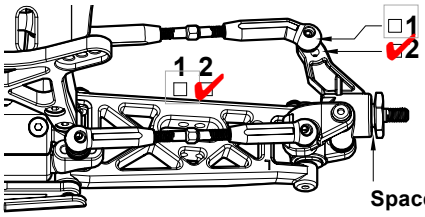


Bumpsteer: _____
Spacer: yes

**Arm Holder Spacer**
☑ 0.5mm ☐ 1mm

**Caster**
☑ 25° ☐ 30°

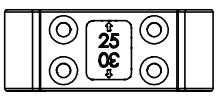


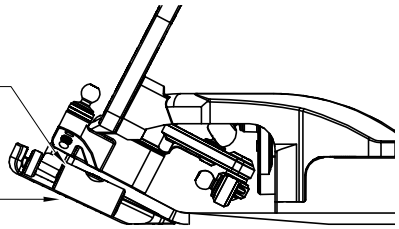

## Rear Suspension

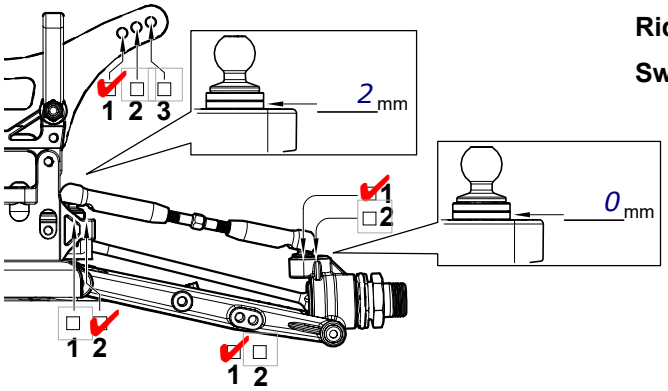


**Camber:** -2 deg
**Ride Height:** 17
**Swaybar:** non

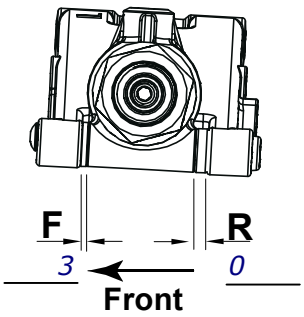


**Rear Shocks**
Oil: 32.5wt losi
Piston: 2x1.7mm
Spring: 2.05ib/in
Preload: _____
Limiter - In: 2 Out: 0

Body: standard
Wing: stardard
Notes: xray wing mounts

Wing spacer _____ mm

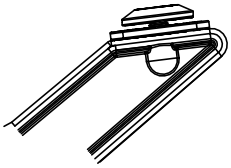

**Rear Toe-in**

| F | R |
|---|---|
| ☐ -1 | ☐ -1 |
| ☑ 0 | ☑ 0 |
| ☐ +1 | ☐ +1 |

Notes:
prototype rear shock tower fitted.
new chassis layout with no weight added to the car.
schumacher white PTFE slipper pads used.